Substantive Changes

City of Springfield, Missouri

Design Standards, General Conditions & Technical Specifications, and Standard Drawing Details for Public Improvements

Adopted:

Dan Smith _____
Director of Public Works

City of Springfield, Missouri

General Conditions & Technical Specifications for Public Improvements

Adopted:

Dan Smith
Director of Public Works

~~17.~~16. **Contract.** The entire and integrated written agreement between the Owner and Contractor concerning the Work. The Contract supersedes prior negotiations, representations, or agreements, whether written or oral.

~~18.~~17. **Contract Bond.** The form of security approved by the City to be used by the contractor and his surety or sureties guaranteeing complete performance of the contract and the payment of all legal debts pertaining to the construction of the project, and conditioned as may be required by the Code of the City of Springfield, Missouri.

~~19.~~18. **Contract Documents.** Those items so designated in the Agreement. Only printed or hard copies of the items listed in the Agreement are Contract Documents. Approved Shop Drawings, other Contractor submittals, and the reports and drawings of subsurface and physical conditions are not Contract Documents.

~~20.~~19. **Contract Price**. The moneys payable by Owner to Contractor for completion of the Work in accordance with the Contract Documents as stated in the Agreement (subject to the provisions of Chapter 2 Paragraph 11.03 in the case of Unit Price Work).

~~21.~~20. **Contract Times**. The number of days or the dates stated in the Agreement to: (i) achieve Milestones, if any; (ii) achieve Substantial Completion; and (iii) complete the Work so that it is ready for final payment as evidenced by Engineer's written recommendation of final payment.

~~22.~~21. **Contractor.** The individual or entity with whom Owner has entered into the Agreement.

22. **Cost of the Work.** See Chapter 2 Paragraph ~~18~~ 11.01 for definition.

23. **Ditch Line.** A line where the roadway ditch meets the back slope. It is located at the lowest point of a V-bottom ditch or furthest point from the roadway of a flat bottom ditch where the roadway slopes back to the existing ground line.

~~23.~~24. **Duct.** An enclosed tubular casing, or raceway, for protecting wires, lines, or cables that is often flexible or semi-rigid (1-3% diametric deflection). The casing, or raceway, is separate from the cable or conductor that passes through it.

25. **Engineer.** The Director of Public Works, and his designee(s), including the individual whom the Director of Public Works has identified as Project Manager overseeing the Work. Engineer is a representative of Owner.

~~24.~~26. **Engineer of Record.** The Registered Professional Engineer responsible for signing, sealing and dating all submitted contract plans and job special provisions.

~~25.~~27. **Float.** The amount of time between the early start date and the late start date, or the early finish date and the late finish date, of any of the activities in the progress schedule.

the Work, and certain administrative requirements and procedural matters applicable thereto.

~~59.~~61. **Subcontractor.** An individual or entity having a direct contract with Contractor or with any other Subcontractor for the performance of a part of the Work at the Site.

~~60.~~62. **Substantial Completion.** The time at which the Work (or a specified part thereof) has progressed to the point where, in the opinion of Engineer, the Work (or a specified part thereof) is sufficiently complete, in accordance with the Contract Documents, so that the Work (or a specified part thereof) can be utilized for the purposes for which it is intended. The terms "substantially complete" and "substantially completed" as applied to all or part of the Work refer to Substantial Completion thereof.

~~61.~~63. **Successful Bidder.** The Bidder submitting a responsive Bid to whom Owner makes an award.

~~62.~~64. **Supplier.** A manufacturer, fabricator, supplier, distributor, materialman, or vendor having a direct contract with Contractor or with any Subcontractor to furnish materials or equipment to be incorporated in the Work by Contractor or Subcontractor.

~~63.~~65. **Surety.** A corporate body duly authorized to do business in the State of Missouri, and which has executed a bid bond with the bidder or a contract bond with the contractor.

66. **Underground Facilities.** All underground pipelines, conduits, ducts, cables, wires, manholes, vaults, tanks, tunnels, or other such facilities or attachments, and any encasements containing such facilities, including those that convey electricity, gases, steam, liquid petroleum products, telephone or other communications, cable television, water, wastewater, storm water, other liquids or chemicals, or traffic or other control systems.

~~64.~~67. **Utility**: Privately, publicly or cooperatively owned line, facility or system for producing, transmitting, or distributing communications, cable television, power, electricity, light, heat, gas, oil, crude products, water, steam, waste, storm water not connected with highway drainage or any other similar commodity, including any fire or police signal system or street lighting system which directly or indirectly serves the public and does not include privately owned facilities devoted exclusively to private use. The term utility also means the utility company inclusive of any wholly owned or controlled subsidiary. The term "utility" includes those facilities used solely by the utility that are a part of its operating plant. The term also includes those utility type facilities that are owned or leased by a government agency for its own use or otherwise dedicated solely to governmental use.

~~65.~~68. **Work.** The entire construction or the various separately identifiable parts thereof required to be provided under the Contract Documents. Work includes and is the result of performing or providing all labor, services, and documentation necessary to produce such

ARTICLE 1 - DEFINITIONS AND TERMINOLOGY [Entire section of EJCDC deleted and replaced with Owner-specific requirements, which can be found in Chapter 1 of the City of Springfield's *General Conditions and Technical Specifications*.]

ARTICLE 2 - PRELIMINARY MATTERS

2.01 *Delivery of Bonds and Evidence of Insurance*

A. When Contractor delivers the executed counterparts of the Agreement to Owner, Contractor shall also deliver to Owner such bonds as Contractor may be required to furnish.

B. *Evidence of Insurance:* Before any Work at the Site is started, Contractor and Owner shall each deliver to the other, with copies to each additional insured identified **herein** ~~in the Supplementary Conditions~~ , certificates of insurance (and other evidence of insurance which either of them or any additional insured may reasonably request) which Contractor and Owner respectively are required to purchase and maintain in accordance with Article 5.

2.02 *Copies of Documents*

A. **Owner shall furnish to Contractor, free of charge, ~~five (5)~~three (3) copies of the Specifications and ~~five (5)~~three (3) sets of the Plans, together with all Addenda. Additional copies of the Project Manual and Plans may be obtained from Owner upon request at the cost of reproduction.** ~~Owner shall furnish to Contractor up to ten printed or hard copies of the Drawings and Project Manual. Additional copies will be furnished upon request at the cost of reproduction.~~

~~B. Owner must approve any change by an authorized representative at least thirty (30) days prior to consideration of any change orders.~~

2.03 *Commencement of Contract Times; Notice to Proceed*

A. The Contract Times will commence to run on the thirtieth day after the Effective Date of the Agreement or, if a Notice to Proceed is given, on the day indicated in the Notice to Proceed. A Notice to Proceed may be given at any time within 30 days after the Effective Date of the Agreement. In no event will the Contract Times commence to run later than the sixtieth day after the day of Bid opening or the thirtieth day after the Effective Date of the Agreement, whichever date is earlier**, unless stated otherwise in the Special Provisions**.

2.04 *Starting the Work*

Adapted from EJCDC C-700 Standard General Conditions of the Construction Contract Copyright © 2007 National Society of Professional Engineers for EJCDC. All rights reserved. Additions shown in **bold** and deletions shown in ~~strike through~~.

E. Work in Confined Spaces. Contractor is hereby notified that manholes and other structures included under the confined-space definition of 29 CFR 1910.146, shall be considered as hazardous locations with hazardous atmospheric conditions. The structures may contain methane, hydrogen sulfide, carbon dioxide, and other gases which are dangerous to life or health. Contractor shall allow its personnel or Subcontractors to enter these confined spaces only through compliance with an entry permit program as specified herein. Contractor shall establish and maintain a confined-space entry program appropriate to the structures and conditions encountered. The program shall meet the requirements of 29 CFR 1910.146 and shall specifically address the provisions of Paragraph (d) therein. Contractor shall enforce the requirements of 29 CFR 1910.146 Paragraphs (e) and (f) therein, shall establish and conduct a training program in accordance with Paragraph (g) therein, and shall comply with all other applicable requirements of the referenced regulation.

F. Labor Standards and Prevailing Wages. Contractor will be required to furnish an affidavit to Owner stating that he has paid the prevailing wages as set forth in the latest annual Wage Order for Greene County issued by the Missouri Division of Labor Standards. All labor utilized in the construction of the aforementioned improvements shall be paid a wage of no less than the "prevailing hourly rate of wages" for work of a similar character in this locality, as established and amended at any time by the Department of Labor and Industrial Relations of the State of Missouri. The Contractor shall submit to the Construction Inspector monthly certified copies of payrolls including any subcontractors that may be working that month. At any time the contractor is found to not have paid prevailing wages, the contractor shall forfeit as a penalty to Owner one hundred dollars for each underpaid worker employed, for each calendar day, or portion thereof such worker is paid less than the said stipulated rates for any work done under this contract. Wage interviews of the Contractor's and Subcontractors' work force may be made at random to verify that the prevailing wage rate is being paid. These interviews may be on site examinations or a questionnaire mailed to the individual.

G. Employment of Unauthorized Aliens. Pursuant to Section 285.530, RSMo., Contractor and its subcontractors, shall not knowingly employ, hire for employment, or continue to employ an unauthorized alien to perform work within the State of Missouri, and shall affirm, by "E-Verify", its enrollment and participation in a federal work authorized program with respect to the employees working in connection with contracted services. Further, Contractor shall sign an affidavit affirming that it does not knowingly employ any person who is an unauthorized alien in connection with the contracted services. In accordance with sections 285.525 to 285.550, RSMo a general contractor or subcontractor of any tier shall not be liable when such a contractor or subcontractor contracts with its direct subcontractor with its direct subcontractor who violates subsection 1 of section 285.520, RSMo if the contract binding the contractor and subcontractor affirmatively states that the direct subcontractor is not knowingly in violation of subsection 1 of section 285.530, RSMo and shall not henceforth be in such violation and the contractor or subcontractor

Adapted from EJCDC C-700 Standard General Conditions of the Construction Contract Copyright © 2007 National Society of Professional Engineers for EJCDC. All rights reserved. Additions shown in **bold** and deletions shown in ~~strike through~~.

~~recommendation of payment and present the Application for Payment to Owner for payment. At the same~~ **at that** time Engineer will ~~also~~ give written notice to ~~Owner and~~ Contractor that the Work is acceptable subject to the provisions of Paragraph 14.09. Otherwise, Engineer will return the Application for Payment to Contractor, indicating in writing the reasons for refusing to recommend final payment, in which case Contractor shall make the necessary corrections and resubmit the Application for Payment.

C. *Payment Becomes Due:*

1. Thirty days after the presentation to Owner of the Application for Payment**, Affidavit of Compliance** and accompanying documentation, the amount recommended by Engineer, less any sum Owner is entitled to set off against Engineer's recommendation, including but not limited to liquidated damages, will become due and ~~will be paid~~**payment process will be initiated** by Owner to Contractor.

14.08 *Final Completion Delayed*

A. If, through no fault of Contractor, final completion of the Work is significantly delayed, and if Engineer so confirms, Owner shall, upon receipt of Contractor's final Application for Payment (for Work fully completed and accepted) and recommendation of Engineer, and without terminating the Contract, make payment of the balance due for that portion of the Work fully completed and accepted. If the remaining balance to be held by Owner for Work not fully completed or corrected is less than the retainage stipulated in the Agreement, and if bonds have been furnished as required in Paragraph 5.01, the written consent of the surety to the payment of the balance due for that portion of the Work fully completed and accepted shall be submitted by Contractor to Engineer with the Application for such payment. Such payment shall be made under the terms and conditions governing final payment, except that it shall not constitute a waiver of Claims.

14.09 *Waiver of Claims*

A. The making and acceptance of final payment will constitute:

1. a waiver of all Claims by Owner against Contractor, except Claims arising from unsettled Liens, from defective Work appearing after final inspection pursuant to Paragraph 14.06, from failure to comply with the Contract Documents or the terms of any special guarantees specified therein, or from Contractor's continuing obligations under the Contract Documents; and

2. a waiver of all Claims by Contractor against Owner other than those previously made in accordance with the requirements herein and expressly acknowledged by Owner in writing as still unsettled.

Adapted from EJCDC C-700 Standard General Conditions of the Construction Contract Copyright © 2007 National Society of Professional Engineers for EJCDC. All rights reserved. Additions shown in **bold** and deletions shown in ~~strike through~~.

14.10 *Liquidated Damages*

A. Contractor shall furnish all supervision, labor, tools, equipment, materials and supplies as stated in Article 6 necessary to complete the Contract within the Contract Times. All time limits for Substantial Completion, and completion and readiness for final payment are of the essence to the Contract.

B. Contractor shall have all Work substantially complete within the Contract Times specified in the Job Special Provisions, and completed and ready for final payment in accordance with Paragraph 14.07.B within 45 calendar days after the Engineer issues a Certificate of Substantial Completion.

C. Failure or delay in completing work on time as specified or such additional time as may be allowed by the Engineer under the contract shall result in liquidated damages. This amount of liquidated damages is agreed upon by Contractor and Owner, not as a penalty, but as liquidated damages for difficult to quantify losses to the Owner and the public. Permitting the Contractor to continue and finish the work or any part of it after the expiration of the specified time, or after the extension of the time, shall in no way operate as a waiver on the part of the Owner or of any of its rights under the contract.

1. Contractor shall pay Owner liquidated damages in an amount specified in the Contract for each day that expires after the time specified for Substantial Completion until the Work is substantially completed.

2. After Substantial Completion, if Contractor shall neglect, refuse, or fail to complete the remaining Work within the Contract Times or any proper extension thereof granted by Owner, Contractor shall pay Owner fifty dollars ($50.00) for each day that expires after the time specified in Paragraph 14.10.B for completion and readiness for final payment until the Work is completed and ready for final payment.

3. The liquidated damages set forth in Paragraphs 14.10.C.1 and 14.10.C.2 shall not be cumulative. If Substantial Completion of the Work is not met within the time specified for final completion of all Work, the liquidated damages shall continue to be at the rate or rates specified for default on Substantial Completion until Substantial Completion is attained. If the Work is not then finally completed, the rate or rates specified for default on final completion shall apply until final completion is attained.

4. Owner shall have the right to deduct the liquidated damages from any money in its hands, otherwise due, or to become due, to Contractor, or initiate applicable dispute resolution procedures and to recover liquidated damages for nonperformance of this Contract within the time stipulated.

Adapted from EJCDC C-700 Standard General Conditions of the Construction Contract Copyright © 2007 National Society of Professional Engineers for EJCDC. All rights reserved. Additions shown in **bold** and deletions shown in ~~strike through~~.

3 EARTHWORK

3.1 CLEARING AND GRUBBING

3.1.1 Scope of Work. This work shall consist of clearing, grubbing, removing, and disposing of vegetation within the limits of right-of-way and easement areas, except such vegetation as is designated to remain or to be selectively treated. Demolition of buildings and structures including foundations and slabs shall be as specified in the Special Provisions or on the plans.

3.1.2 Construction Requirements. The Engineer will establish right-of-way and construction lines and will designate all trees, shrubs, and plants that are to remain. The contractor shall preserve without damage any trees and shrubs designated to remain. All trees, stumps, brush, and hedge not designated to remain shall be cleared and grubbed as required and shall be disposed of in an acceptable manner.

Stumps and roots in fill and cut areas shall be grubbed to a depth of not less than 12 inches below the existing earth grade. Stump holes shall be back-filled with suitable material and compacted to the approximate density of the adjacent area. Grubbing of borrow areas, channel changes, and inlet and outlet easements will be required only to the extent necessitated by the proposed construction.

Burning of products from clearing and grubbing operations will not be permitted without obtaining a burning permit from the City Fire Department. The burial of stumps and debris will not be permitted on the right-of-way. Products of clearing and grubbing shall be removed from the right-of-way and disposed of out of sight from the roadway provided an acceptable written agreement with the property owner on whose property the products are placed is submitted by the contractor.

Within the construction limits of the project, the contractor shall trim any tree which does not provide nine (9) feet vertical clearance above any sidewalk and fourteen (14) feet vertical clearance above any street. Tree trimming shall be done before final payment and the trees shall be shaped at the direction of the Engineer. This tree trimming shall be considered incidental to the contract and no additional compensation shall be allowed.

Contractor shall protect and preserve the established reference points and property monuments, and shall make no changes or relocations without the prior written approval of the Engineer. Contractor shall report to Engineer whenever any reference point or property monument is lost or destroyed or requires relocation because of necessary changes in grades or locations, and shall be responsible for the accurate replacement or relocation of such reference points or property monuments by professionally qualified personnel.

3.1.3 Basis of Payment. The accepted quantities of clearing and grubbing will be paid for at the lump sum price as stated in the contract. Payment for this item will be made at the completion of the clearing and grubbing operation. When no pay item for clearing or grubbing is included in

content within the tolerance of the moisture range for each type of material at the specified percent of maximum density as determined by the moisture density curve.

Earth embankment, except the top six (6) inches, and the surface of the existing ground on which embankment is to be placed shall be compacted to at least 90% of the maximum density as determined above. The top six (6) inches of the embankment shall be compacted to at least 95% of the maximum density.

All the work involved in either adding moisture to, or removing moisture from embankment materials to within the moisture limits shall be considered incidental to the completion of the grading operation.

During the progress of the work, the in-place density of the embankment will be determined by ASTM Designation D-1556 or D-2167. Unless otherwise stated in the Special Provisions, testing for compaction shall be at the expense of the City.

3.2.6 Cut Compaction and Undergrading. Where materials are encountered below grade which are deemed unsatisfactory by the Engineer for use in the work, either cut compaction or undergrading shall be preformed, as determined by the Engineer.

3.2.6.1 Cut Compaction. Cut ~~c~~Compaction shall include the temporary removal of material twelve (12) inches below the bottom of the lowest base course for the full width of the road bed. The exposed material, to a depth of six (6) inches, shall be manipulated and compacted to not less than the required density. The previously excavated material above this compacted plane shall then be replaced in layers not exceeding eight (8) inches loose thickness, after being wetted or dried as necessary, and compacted to the specified density. The entire volume so handled and compacted including the six (6) inch layer compacted in place, will be considered as Cut ~~c~~Compaction and paid for at the rate specified in the Contract Documents ~~for payment as per the unit price bid in the contract~~.

3.2.6.2 Undergrading. Undergrading shall include the removal of earth materials below grade to a maximum depth of twenty-four (24) inches and to the limits designated by the Engineer. The excavated area shall be back-filled in twelve (12) inch lifts with crushed stone or crushed concrete ranging in size from two (2) to six (6) inches and ~~predominantly~~ free of soil fines. The back-fill material shall be compacted with a minimum of three passes with a vibratory roller with a manufactures rating of sixteen (16) to twenty (20) tons of compacting power. Contractor is to place material until the fill surface is below finished subgrade elevation.

~~Weight tickets for Undergrading must be presented to the project inspector upon the day of delivery.~~ The excavation and back-fill will be considered as Undergrading and paid for at ~~a cubic yard rate of 2800lbs/cubic yard~~the rate specified in the Contract Documents. ~~Payment for Undergrading exceeding twenty-four (24) inches in depth shall require approval from the Director of Public Works.~~

Bedding Material shall be crushed stone or crushed gravel conforming to the requirements of ASTM Standard C 33 or ASTM D 448 size no. 67, and having a gradation as follows:

Sieve	% Passing
1”	100
¾”	90 - 100
3/8”	20 - 55
No.4	0 - 10
No.8	0 – 5

	~~Sieve Size~~	~~% Passing~~
~~Passing~~	~~5/8”~~	~~90 - 100~~
~~Passing~~	~~1/2”~~	~~75 - 100~~
~~Passing~~	~~3/8”~~	~~30 - 75~~
~~Passing~~	~~#4~~	~~5 - 25~~
~~Passing~~	~~#8~~	~~3 - 6~~
~~Passing~~	~~#30~~	~~2.5 - 5.0~~
~~Passing~~	~~#200~~	~~1 - 2.5~~

4.1.2.5 Miscellaneous Materials. Any materials requested by the contractor for use during construction but not described in this specification will be subject to the approval or rejection of the Engineer.

4.1.3 Construction Methods.

4.1.3.1 Classification of Excavated Materials will be made as follows:

A. Rock is defined as sandstone, limestone, chert, granite, siltstone quartzite, slate, shale occurring in its natural undisturbed state, hard and unweathered, in ledges 6 inches or more in thickness, or similar material in masses or boulders, each being more than 1 ½ cubic yards in volume.

   Should rock be encountered in two or more ledges, each ledge being more than 6 inches thick and with interlying strata of earth, clay, shale, or gravel not more than 12 inches in each stratum, the entire volume between the top of the upper ledge and bottom of the lower ledge will be classified as rock.

B. Earth. All materials not classified as rock shall be classified as earth. Chert (joint flint rock) broken by intermittent clay partings or clay seams or stratified chert cemented with clay seams (hardpans) shall be considered as earth.

C. Unclassified excavation will consist of the excavation of all materials of whatever character encountered in the work. All material required to be excavated will be considered as “Unclassified Excavation” unless the contract specifically states otherwise.

Bedding Material shall be crushed stone or crushed gravel conforming to the requirements of ASTM Standard C 33 or ASTM D 448 size no. 67, and having a gradation as follows:

Sieve	% Passing
1”	100
¾”	90 - 100
3/8”	20 - 55
No.4	0 - 10
No.8	0 – 5

	~~Sieve Size~~	~~% Passing~~
~~Passing~~	~~5/8”~~	~~90 - 100~~
~~Passing~~	~~1/2”~~	~~75 - 100~~
~~Passing~~	~~3/8”~~	~~30 - 75~~
~~Passing~~	~~#4~~	~~5 - 25~~
~~Passing~~	~~#8~~	~~3 - 6~~
~~Passing~~	~~#30~~	~~2.5 - 5.0~~
~~Passing~~	~~#200~~	~~1 - 2.5~~

4.1.2.5 Miscellaneous Materials. Any materials requested by the contractor for use during construction but not described in this specification will be subject to the approval or rejection of the Engineer.

4.1.3 Construction Methods.

4.1.3.1 Classification of Excavated Materials will be made as follows:

A. Rock is defined as sandstone, limestone, chert, granite, siltstone quartzite, slate, shale occurring in its natural undisturbed state, hard and unweathered, in ledges 6 inches or more in thickness, or similar material in masses or boulders, each being more than 1 ½ cubic yards in volume.

   Should rock be encountered in two or more ledges, each ledge being more than 6 inches thick and with interlying strata of earth, clay, shale, or gravel not more than 12 inches in each stratum, the entire volume between the top of the upper ledge and bottom of the lower ledge will be classified as rock.

B. Earth. All materials not classified as rock shall be classified as earth. Chert (joint flint rock) broken by intermittent clay partings or clay seams or stratified chert cemented with clay seams (hardpans) shall be considered as earth.

C. Unclassified excavation will consist of the excavation of all materials of whatever character encountered in the work. All material required to be excavated will be considered as “Unclassified Excavation” unless the contract specifically states otherwise.

use. No tees will be permitted to connect to the main opposite each other. The minimum distance permitted between tees shall be two (2) feet.

4.1.3.6 Laterals. All laterals shall have a minimum of ¼-inch per foot slope, unless otherwise approved. On PVC tees and lateral lines, all joints must be glued with an approved adhesive. The plans shall show the stationing of all in-line tees and shall be placed as near as possible to the center of the lot, so as to provide maximum clearance for driveways and utility lines. All PVC laterals shall be Schedule 40 pipe.

No more than 700 feet of sewer line shall be constructed prior to commencing construction of laterals. At the option of the contractor, construction of the sewer lines and laterals may be performed concurrently. If, in the opinion of the Engineer, the lateral construction is not proceeding in a timely manner, the Engineer may order the contractor to cease work on the sewer line construction until such time as lateral construction has proceeded to a point satisfactory to the Engineer.

If the sewer is being constructed within the street right-of-way, all laterals shall extend to ~~5' past~~ the right-of-way line. All laterals within street right-of-way shall be a minimum of four (4) feet deep at the right-of-way line. It will be the responsibility of the contractor to assure service to each property. If the main sewer line is deep enough, then service shall be provided to basements. If a tee is to be placed but no lateral is required on a main sewer line eight (8) feet or more in depth, a four (4)-inch riser shall be placed, bringing the connection to a maximum depth of seven (7) feet below finished ground level. This riser will be measured and paid for as lateral line.

No lateral can be located within two (~~2~~5) feet of a manhole or connected into a manhole without approval of the Engineer. If lateral is to be connected to an existing manhole, the manhole shall be cored and fitted with an insert-a-lock or approved equal.

Any lateral connected to a manhole shall have an approved channeling device. Refer to Standard Drawing San-6 or Chapter ~~IV~~4.2.3, Construction Methods (Inverts).

A general purpose flexible marker shall be required at the end of each lateral, extending 1' above finish grades.

Before backfilling, laterals shall be plugged or capped in a manner acceptable to the inspector.

4.1.3.6.1 Clean-outs. When new lateral sewer lines are installed and connected to an underground facility within the public right-of-way, or if such infrastructure is fully replaced by excavation within the public right-of-way, the Contractor is required to place tracer wire and cleanout for gravity sewer laterals (Standard Drawing Details SAN-24 and SAN-25). All protective enclosures and cleanouts shall be extended to grade and installed so that it is easily accessible. For sewer laterals operating under pressure or vacuum, tracer wire shall be placed within the protective enclosure to provide approximate location of the underground facilities in these areas that are located within a public right-of-way. An underground facility owner shall not be liable to any party for damages or injuries resulting from an excavation if they are in

compliance with this section. This section shall apply to all installations of sewer laterals without regard to their status as underground facilities.

4.1.3.6.2 Locator Wire. The locator wire shall be green no. 12 awg copper clad steel(ccs). to allow for grade adjustment, a minimum of 12" of excess wire shall be coiled at the cleanout for all wires.

Conductive type pipe locator/tracer wire shall be installed to locate all sewer laterals. The wire shall extend the entire length of the proposed lateral. The wire shall be installed directly on top the pipe and secured to the lateral by tape at base of riser, sewer main and every 15'. Corrosion proof/filled wire connectors shall be used at splice locations. Electrical tape shall be used and no bare wire shall be exposed. Test stations shall be installed inside all cleanout vaults and existing wires shall be connected. Zinc or magnesium anodes shall be attached at the end of the tracer wire as shown on Standard Drawing Detail SAN-25. A typical layout of the locator wire and cleanout is provided in Standard Drawing Detail SAN-25. Conductivity is to be tested by the City before acceptance.

4.1.3.6.3 Anodes. The anode shall be ½ lb bare zinc or magnesium. The anodes shall be buried at the same elevation and in close proximity to the sewer lateral. The 1.315" diameter anodes shall be connected to the green no. 12 awg copper clad steel(ccs) wire.

4.1.3.7 Cleaning. The interior of the sewer line shall, as the work progresses, be cleaned of all dirt and other foreign material. On small pipe sewers where cleaning after laying may be difficult, a swab or drag shall be kept inside the pipeline and pulled forward past each joint immediately after its completion.

At the end of each workday, the end of the sewer pipe or manhole shall be plugged or capped to prevent the intrusion of water, dirt, gravel, and all other foreign material. At the beginning of each workday, the trench shall be dewatered (by pumping) before opening the end of the sewer pipe. The end of the pipe shall be cleared to prevent the intrusion of foreign material.

Note: If the City Forces are hired to clean and flush lines, a minimum of four (4) hours will be charged to the contractor.

4.1.3.8 Joints. Joints for reinforced concrete pipe with flexible rubber gaskets shall be made in accordance with manufacturer's recommendation. Bell and spigot, or tongue and groove ends of the pipe shall first be wiped clean before actual jointing operations are started.

Immediately prior to jointing, all surfaces of the joint shall be thoroughly cleaned and lubricated with soapy water or in accordance with manufacturer's recommendations. The tongue end shall be centered on grade into the groove end of the last downstream length of pipe and shoved completely home and properly seated with the application of steady pressure by a lever, winch, or other suitable device. Care shall be used to prevent displacement of the gasket during jointing.

All surplus excavation material not used in the backfill shall be disposed of by the contractor at his expense. Upon receipt of written notice from the Engineer, any settlement of the backfill below the original ground surface shall be remedied by the contractor for a period of one (1) year after final completion and acceptance.

Tunnels. The backfill material for all sewers laid in tunnels shall be sand or finely crushed limestone of which one hundred (100) percent shall pass a 3/16-inch sieve. The backfill shall be thoroughly compacted or blown in.

4.1.3.10 Pavement Replacement.

4.1.3.10.1Temporary Replacement. If for any reason a roadway must be opened for traffic, after the sewer is in place but before the pavement is replaced, then the contractor must provide a one (1)- inch asphalt cap on the trench backfill within 24 hours. This asphalt cap shall be the contractor's responsibility and no additional compensation will be allowed. Backfill and/or asphalt shall be removed as necessary prior to placement of the permanent pavement.

4.1.3.10.2 Permanent Replacement. All pavement and curbs damaged during construction, in the opinion of the Engineer or Inspector, shall be removed and replaced. In order to determine the amount of damage to the pavement and curbs during construction, all existing cracks in the street or curb should be marked/painted in advance of construction. Permanent pavement replacement shall not occur any later than thirty (30) calendar days after backfilling, unless otherwise approved by the Engineer.

The existing pavement necessary to be removed for construction shall follow the Pavement Repair Standard Drawing Detail ST-13. The existing pavement shall be sawed in a neat line and removed prior to excavation. The width of this removal shall not exceed the width specified on the plans or approved by the Engineer.~~will be specified in the special provisions and payment for pavement repair shall not exceed the width specified.~~

The ~~paving~~ pavement shall be sawed prior to replacement ~~as~~ to ensure a straight edge and a uniform patch. The subgrade for the new ~~paving~~ pavement shall be further compacted by rolling or tamping. The pavement shall then be ~~relaid~~ replaced with eight (8) inches of concrete pavement. The pavement shall be doweled with 1"x18" dowels on twenty-four (24) inch centers along all transverse joints. Dowel bars shall be omitted when repairing bituminous pavement.~~carefully in accordance with the requirements of the section of the materials specified. The minimum required thickness of pavement replacement shall be either six (6) inches of concrete for concrete surfaces or six (6) inches of concrete and two (2) inches of asphalt surface course for bituminous surfaces.~~

4.1.4 Method of Measurement.

4.1.4.1 Pipe. Final measurement of all pipe will be to the nearest foot.

4.1.4.2 Encasement. Final measurement of all encasements will be to the nearest foot.

5 STORM SEWERS

5.1 PIPE

5.1.1 Scope of Work. The work shall consist of furnishing all labor, materials, and equipment for the complete installation of storm sewer pipe, and appurtenances, in conformance with the lines and grades shown on the plans or as established by the Engineer and as specified herein. Items of work or materials not specifically mentioned, but necessary for the completion of storm sewer line construction shall be considered as incidental to other items in the contract.

5.1.2 Materials.

5.1.2.1 Pipe. ~~Pipe shall be of the type, size, and class shown on the plans.~~ Storm sewer pipe placed under pavement or where the nearest edge of the pipe trench is within two (2) feet of the back of curb shall be Reinforced Concrete ~~or~~ ,Polypropylene, or Corrugated Metal pipe, as specified below.

5.1.2.1.1 Unreinforced Concrete Sewer Pipe. Unreinforced concrete sewer pipe shall conform to the Specifications for Concrete Sewer Pipe, A.S.T.M. Designation C14, the pipe furnished to be of the class designated as Non-Reinforced Concrete Sewer Pipe, Class I, II, or III (depending on D-load strength required.

5.1.2.1.2 Reinforced Concrete Culvert Pipe. Reinforced concrete pipe shall conform to the requirements of the Specifications for Reinforced Concrete Culvert Pipe, A.S.T.M. Designation C76. Unless otherwise shown on the plans or stated in the Special Provisions, installations shall be made with circular pipe conforming to the requirements for Class III, Wall B of this A.S.T.M. specification. When reinforced concrete elliptical pipe is to be used, installation shall be made with pipe conforming to the requirements of A.S.T.M. Designation C507, Class HE-111.

5.1.2.1.3 Dual Wall and Triple Wall Polypropylene Pipe. Dual wall pipe and fittings 12 inch through 30 inch diameter pipe shall conform to ASTM F2736 and triple wall pipe 30 inch through 60 inch shall conform to ASTM F2764. Dual wall polypropylene pipe shall have a smooth interior and annular exterior corrugations. Triple wall polypropylene pipe shall have a smooth interior and exterior with annular inner corrugations. Pipe shall have a minimum pipe stiffness of 46 pii when tested in accordance with ASTM D2412. Pipe shall be joined with an integral bell and spigot joint on all sizes. The joints shall be watertight in accordance with ASTM D3212. The spigot shall have two gaskets meeting the requirements of ASTM F477. The gaskets shall be installed by the pipe manufacturer and shall be covered with a removable, protective wrap to ensure the gaskets are free from debris. Pipe shall have a reinforced bell with a polymer composite band installed by the manufacturer. A joint lubricant shall be used on the gasket and pipe bell during assembly.

Each individual section of pipe shall be marked in accordance with ASTM F 2736 or ASTM F 2764, and shall have "ASTM F 2736" or ASTM F 2764" and the manufacture's name marked on the pipe.

5.1.2.1.4 Corrugated Metal Pipe. Aluminum coated steel pipe, polymer coated steel pipe and aluminum alloy pipe may be used in the construction of storm sewer applications. All metal coated steel pipes shall be Type I, Type IA or Type IR in compliance with AASHTO M 36 unless otherwise specified. Sheet steel must be certifiable in accordance with AASHTO M 274. All pipes will be subject to inspection of the engineer at the source of manufacture, at an intermediate shipping terminal or at destination. The engineer shall be allowed unlimited access to all facilities and records, as required, to conduct inspection and sampling.

The interior roughness coefficient (Manning's 'n' value) of Corrugated Metal Pipe shall be equal to or less than 0.013.

-The thickness of the coated steel shall be a minimum thickness as follows:

Pipe Dia. Inches	Minimum Gauge of Steel Pipe	
	2 2/3" x 1/2" 3/4" x 3/4" x7 1/2"	3"X1" 5"X1"
< 42"	14	14
42" < 60"	12	12
60" < 78"	10	12
78" < 108"	N/A	12
108" and above	N/A	10

5.1.2.2 Concrete Pipe Joints. Joints for concrete pipe shall be any of the following:

5.1.2.2.1 Neoprene Gaskets. Flexible Neoprene Gaskets of the proper size conforming to the requirements of A.S.T.M. Designation C443.

5.1.2.2.2 Bituminous Mastic Joint Compound. This compound shall be a homogeneous blend of bituminous material, inert filler, and suitable solvents or plasticizing compounds thoroughly mixed at the factory to a uniform consistency.

5.1.2.3 Dual Wall and Triple Wall Polypropylene Joints. Field joints shall provide circumferential and longitudinal strength to maintain the pipe alignment, prevent separation of pipe and prevent infiltration of fill material. Coupling bands, if used, shall be of the same base material as the pipe. Prior to use, the design of coupling bands and fastening devices shall be submitted to and approved by the Engineer. Final acceptance of coupling bands and fastening devices will be based on field performance.

5.1.2.4 Corregated Metal Pipe Joints. Field joints shall provide circumferential and longitudinal strength to maintain the pipe alignment, prevent separation of pipe and prevent

infiltration of fill material. Corrugated Metal Coupling bands shall conform to AASHTO M36 standard joining systems.

5.1.2.5 Bedding Material. Material for bedding shall be crushed stone, ~~or~~ crushed gravel, or crushed concrete conforming to the requirements of A~~.~~S~~.~~T~~.~~M~~.~~ Standard C 33 or ASTM D 448 size no. 67, and having a gradation as follows:

Sieve	% Passing
1”	100
¾”	90 - 100
3/8”	20 - 55
No.4	0 - 10
No.8	0 – 5

	~~Sieve Size~~	~~% Passing~~
~~Passing~~	~~1/2”~~	~~100~~
~~Passing~~	~~3/8”~~	~~0-30~~
~~Passing~~	~~No. 4~~	~~0-5~~

5.1.2.6 Miscellaneous Materials. Any materials requested for use by the contractor during construction but not described in this specification will be subject to the approval or rejection of the Engineer.

5.1.3 Construction Methods.

5.1.3.1 Classification of Excavated Materials. Classification of excavated materials will be made as follows:

5.1.3.1.1 Rock. Rock is defined as being sandstone, limestone, chert, granite, siltstone quartzite, slate, shale occurring in its natural undisturbed state, hard and unweathered, in ledges six (6) inches or more in thickness or similar material in masses or boulders, each being more than 1 ½ cubic yards in volume.

Should rock be encountered in two (2) or more ledges, each ledge being more than six (6) inches thick and with interlying strata of earth, clay, shale, or gravel not more than twelve (12) inches thick in each stratum, the entire volume between the top of the upper ledge and bottom of the lower ledge will be classified as rock.

5.1.3.1.2 Earth. All materials not classified as rock shall be classified as earth. Chert (joint flint rock) broken by intermittent clay partings or clay seams or stratified chert cemented with clay seams (hardpans) shall be classified as earth.

5.1.3.1.3 Unclassified. Unclassified excavation will consist of the excavation of all materials of whatever character encountered in the work. All material required to be excavated will be considered as “Unclassified Excavation” unless the contract specifically states otherwise.

5.1.3.8.2 Permanent Replacement. All pavement and curbs damaged during construction, in the opinion of the Engineer, shall be removed and replaced. In order to determine the amount of damage to the pavement and curbs during construction, all existing cracks in the street or curb should be marked in advance of construction. Pavement replacement (whether temporary or permanent) shall closely follow backfilling operation.

The existing pavement necessary to be removed for construction shall follow the Pavement Repair Standard Drawing Detail ST-13. The existing pavement shall be sawed in a neat line and removed prior to excavation. The width of this removal shall not exceed the width specified on the plans or approved by the Engineer.~~may be as specified in the special provisions and payment for pavement repair shall not exceed the width specified.~~

The ~~paving~~ pavement shall be sawed prior to replacement ~~as~~ to ensure a straight edge and a uniform patch. The subgrade for the new ~~paving~~ pavement shall be further compacted by rolling or tamping. The pavement shall then be ~~relaid~~ replaced with eight (8) inches of concrete pavement. The pavement shall be doweled with 1”x18” dowels on twenty-four (24) inch centers along all transverse joints. Dowel bars shall be omitted when repairing bituminous pavement.~~carefully in accordance with requirements of the section of the materials specified. The minimum required thickness of pavement replacement shall be either eight (8) inches of concrete for concrete surfaces or eight (8) inches of concrete and two (2) inches of asphalt surface course for bituminous surfaces.~~

5.1.4 Method of Measurement.

5.1.4.1 Pipe. Final measurement of all pipe will be to the nearest foot.

5.1.4.2 Encasement. Final measurement of all encasements will be to the nearest foot.

5.1.4.3 Rock Excavation. Final measurement of rock excavation, if specified, will be to the nearest one-tenth (1/10) cubic yard.

5.1.5 Basis of Payment. Contractor will be paid for quantities actually constructed or performed as determined by field measurements at the unit price bid for the items listed in the schedule of the proposal or for such extra work as may be authorized and approved by the Engineer. The cost of incidental work not listed in the schedule of the proposal but necessary for the completion of the project shall be considered as completely covered by bid price for other items in the contract.

Quantities of work acceptably completed under the term of the contract shall be determined by the Engineer based on his actual measurement.

5.1.5.1 Storm sewer pipe in place will be paid for on length of storm sewer laid from inside edge of structure to inside edge of structure and shall include the cost of all labor, materials, including joints, and other necessary fittings, excavation, backfill, and equipment.

6 PORTLAND CEMENT CONCRETE

6.1 DESCRIPTION. The concrete described herein shall consist of a mixture of Portland cement, fine aggregate, coarse aggregate, an air-entraining agent and water combined in the proportions specified for the various classes of concrete used in construction work and as set forth in these specifications. Admixtures may be added as specifically permitted. Unless specified, Class A and Class X Concrete are interchangeable. All concrete mix deigns shall have a minimum 28-Day compressive strength of 4,000psi with the specification listed herein.

6.2 MATERIALS

6.2.1 Cement. Cement shall conform to the ASTM Designation C-150. Type I, and II cement shall be used unless specified in special provisions. Different brands or different types of cement from the same mill or the same brand or type from different mills shall not be mixed or used alternately in the same item of construction unless authorized by the Engineer. The ~~c~~Contractor shall not store cement at the site of the work without prior approval of the Engineer. The right is reserved by the ~~City~~ Engineer to sample the cement either at the origin of the shipment or after delivery at the site of the work or the ready-mix concrete plant. Provisional acceptance by the ~~City~~ Engineer prior to the completion of tests shall in no way act as a waiver of the right to reject cement which has been shipped and unused, if upon completion of the tests, it fails to meet the requirements of the specifications.

6.2.1.1 Supplementary Cementitious Materials (Mineral Admixtures)

6.2.1.1.1 Fly Ash. Fly Ash shall conform to ASTM Designation C-618 Class C or Class F.

6.2.1.1.2 Ground Granulated Blast Surface Slag (GGBFS). GGBFS shall conform to ASTM C 989 and meet the activity performance in Table 1 Grade 100 or grade 120.

6.2.2 Water. Water shall comply with requirements of ASTM C 1602~~, unless specified otherwise~~.

6.2.2.1 Recycled Water. Recycled water from production and stormwater runoff meeting the requirements of ASTM C 1602 and other non-potable water sources shall be tested daily, or at intervals directed by the Engineer, and shall meet the requirements of ASTM 1602 Table 2. The concrete chloride ion content shall be in accordance with of ACI 318.

6.2.3 Fine Aggregate. Fine aggregate shall consist of natural sand, manufactured sand, or a combination thereof that is free from cemented or conglomerated lumps. Fine aggregate shall conform to the requirements of ASTM Designation C-33 Table 1 with respect to deleterious substances, soundness, and abrasion resistance.

6.2.3.1 The gradation requirements of fine aggregate shall be as follows:

ASTM C-33 Sand	
Sieve	% Passing
3/8"	100
No. 4	95 - 100
No. 8	80 - 100
No. 16	50 - 85
No. 30	25 - 60
No.50	5 - 30
No.100	0 - 10

The fine aggregate shall not have more than 45% passing any sieve and its fineness modulus shall be between 2.3 and 3.10.

6.2.4 Coarse Aggregate. The coarse aggregate shall consist of crushed stone or crushed gravel. Coarse aggregates shall be of uniform quality and conform to the requirements of ASTM Designation C-33 Table 3 Class Designation 4S with respect to deleterious substances (excluding deleterious rock), soundness, lightweight chert (specific gravity less than 2.4), lignite, and abrasion resistance.

6.2.4.1 Testing for hard and soft chert, and deleterious aggregate shall be performed in accordance with MoDOT TM-71 Deleterious Content of Aggregate and shall meet the requirements as follows:

Chert and Deleterious Material in Aggregate	
Total of all Deleterious Rock	6.0
Total Shale	1.0
Total Hard and Soft Chert	4.0
Total Other Foreign Material	0.5

6.2.4.2 Coarse aggregates for Class "A" and Class "X" concrete shall meet the gradation requirements as follows:

Coarse Aggregate Gradation Requirements				
U. S. Standard Sieve Size	Percent Passing by Weight			
	Class A		Class X	
	ASTM C 33 No. 467	ASTM C 33 No. 57	ASTM C 33 No.67	ASTM C 33 No. 89
2"	100	--	--	--
1½"	95 - 100	100	--	--
1"	--	95 - 100	100	--

¾"	35 - 70	--	90 - 100	--
½"	--	25 - 60	--	100
⅜"	30-Oct	--	20 - 55	90 - 100
No.4	0 - 5	0 - 10	0 - 10	20 - 55
No.8	--	0 – 5	0 – 5	30-May
No. 16	--	--	--	0 - 10
No. 50	--	--	--	0 - 5
No. 200	1.5 max.	1.5 max.	1.5 max.	1.5 max.

~~**6.2.4.1** The gradation requirements of the coarse aggregate for Class "A" concrete shall meet the requirements of ASTM C 33 Table 2 Size No. 57 and be as follows:~~

~~Sieve~~	~~% Passing~~
~~1½"~~	~~100~~
~~1"~~	~~95 - 100~~
~~½"~~	~~25 - 60~~
~~No.4~~	~~0 - 10~~
~~No.8~~	~~0 – 5~~

~~**6.2.4.2** The gradation requirements of the Coarse aggregate for Class "X" concrete shall meet the requirements of ASTM C 33 Table 2 No. 67 and be as follows:~~

~~Sieve~~	~~% Passing~~
~~1"~~	~~100~~
~~¾"~~	~~90 – 100~~
~~3/8"~~	~~20 - 55~~
~~No.4~~	~~0 - 10~~
~~No.8~~	~~0 – 5~~

6.2.5 Admixtures

6.2.5.1 Air Entrainment. Air entraining ~~Admixture~~ admixtures shall conform to the requirements of ASTM C 260.

6.2.5.2 All other Admixtures except air entrainment for concrete shall conform to the requirements of ASTM C 494.

6.2.5.3 Calcium chloride may only be used in concrete without reinforcing steel or imbedded metal items when approved by the Engineer. Calcium chloride shall not exceed 3% by weight of cement and must meet the requirements of ASTM D 98.

~~**6.2.5.3 Fly Ash.** Fly Ash shall conform to ASTM Designation C-618 Class C or Class F.~~

~~**6.2.5.4 Ground Granulated Blast Furnace Slag (GGBFS)** Not used~~

6.3 PROPORTIONS OF MATERIALS

6.3.1 Cement Content. Class "A" concrete and Class "X" concrete shall contain not less than 564 pounds of cement per cubic yard. Cement content includes weight of pozzolan.

6.3.2 Water Content. The water to cementitious ratio, including free surface moisture on the aggregate, shall not exceed 0.45.

6.3.3 Air Content. Portland cement concrete shall have an air content of 6.0% ± 1.5% of the volume of the concrete when tested in accordance with ASTM Designation C-173 or ASTM C 231.

6.3.4 Fly Ash Content. The Portland cement concrete can contain up to a maximum of ~~20~~25% by weight of fly ash per cubic yard.

6.3.5 Slump. The slump, when tested in accordance with ASTM Designation C-143, shall not exceed 4.0". ~~be 3" ± 1".~~ If a water reducing admixture (WRA) is used then the slump shall not exceed 5.0". ~~be 3" ± 1".~~ If a high range water reducing admixture (HRWR) is used then the slump may not exceed 8.0".

6.4 GENERAL REQUIREMENTS

6.4.1 Weather Limitations. Concrete shall not be placed upon frozen subgrade. All concrete shall be effectively protected from freezing until minimum compression strength has been attained. Regardless of precautions taken, the ~~c~~Contractor shall assume all risks, and frozen concrete shall be replaced at the ~~c~~Contractor's expense.

6.4.2 Cold Weather concrete shall conform to the standard of ACI 306.

6.4.3 Hot weather concrete shall conform to the standard of ACI 305.

6.4.4 Ready-Mix Concrete Plants and Delivery Mixers shall meet the requirements of ASTM C 94 Standard Specification for Ready-Mix Concrete. The manufacturer shall afford the Engineer all reasonable access, without charge, for making necessary checks of the production facility and for securing necessary samples to determine if the concrete is being produced in accordance with this Specification and the Job Special Provisions.

6.4.4.1 Calibration and Certification of Plants and Delivery Mixers shall be certified by the National Ready Mixed Concrete Association (NRMCA). The manufacturer shall have an independent scale company calibrate all scales and measuring devices for batching, cement, water, and aggregates every twelve (12) months. Admixture measuring devices shall be calibrated and certified by the admixture supplier. Anytime a repair is made on plant equipment which can affect the calibration of the measuring devices, a new calibration is required. Blades and drums of the mixers shall be in good condition and be in compliance with the mixer manufacturers' requirements. When excessive buildup is observed in a drum, the truck shall not be used until the buildup is removed.

6.4.~~4~~ 5 Plant Calibration. Plant scales and watering devices shall be calibrated and certified by an approved commercial scale service. A copy of the calibration and certification shall be provided to the ~~e~~Engineer upon request. Plants are to calibrated and certified annually and when found to be out of tolerance during verification.

6.4.~~5~~ 6 Delivery Tickets. The concrete manufacturer ~~of the truck mixed concrete and of central mixed concrete~~ shall furnish a delivery ticket for each batched load to the ~~engineer~~ Construction Inspector ~~with each truck load, a delivery ticket~~ with volumetric batch information containing the quantities of each ingredient at the proportions used to batch that load of concrete. The information included on delivery tickets shall be in accordance with ASTM C 94 which includes, but is not limited to, the following information:

- The mix design batch weights for one cubic yard of concrete submitted for the project, and the batched weights of all materials shall be printed on the delivery ticket.
- The saturated surface-dry batch weights of the aggregates and the free water moisture content of the aggregates shall be printed on the delivery ticket.
- Batch Time, which starts at the time all ingredients have been charged into the delivery vehicle.
- All information that is necessary to calculate the total mixing water.
- The amount of water that can be added on the job site without exceeding the specified water to cement ratio.

6.4.~~6~~ 7 Delivery. ~~Ordinarily, t~~The concrete shall be delivered to the job-site in trucks so designed and operated that the concrete will be thoroughly mixed during the time it is in transit. The concrete ~~and~~ shall be discharged at the site within a period of ninety (90) minutes from batch

time. In hot weather conditions, as defined in ACI 305, the discharge time shall be reduced to sixty (60) minutes.~~or before the drum has revolved 300 times after the introduction of the mixing water.~~ When concrete is placed at the job site, it shall have the proper consistency and slump for satisfactory workability and shall not exhibit signs of mix segregation. The temperature of the concrete shall not be less than 50°F or greater than 90°F ~~degrees F~~ at the time of placement.

6.4.~~7~~ 8 Testing. ~~Testing shall be at the expense of the City unless otherwise stated in the Special Provisions.~~Quality assurance testing will be conducted at intervals determined by the Engineer.

five (25)-foot intervals parallel to centerline ahead and back of the affected location until the extent of the deficiency has been determined.

It will be assumed that each core is representative of the pavement thickness for a distance extending one-half (1/2) the distance to the next core, measured along centerline, or in the case of a beginning or ending core, the distance will extend to the end of the pavement section.

The drilling of cores in irregular areas, or on projects involving less than 2,500 square yards of concrete pavement, may be waived by the Engineer. In this case the designed thickness will be considered as the measured thickness.

9.1.3.12 Pavement Smoothness. This work shall consist of measuring the smoothness of the final pavement surface. Smoothness shall be measured using the International Roughness Index (IRI) for all pavement types. The Contractor shall perform testing on all eligible profiling areas and provide electronic files for smoothness data in .PFF file format to the Engineer in accordance with all the testing and reporting procedures that apply in MoDOT TM-59.

~~**9.1.3.12.1 Local & Collector Streets.** Finished pavements on Local and Collector streets shall be checked with a ten (10) foot straightedge placed parallel to the center line at any location within a driving lane. Areas showing high spots of more than 1/4 of an inch in 10 feet shall be marked and ground down with an approved grinding tool to an elevation where the area or spot will not show surface deviations in excess of 1/8 inch when tested with a 10 foot straight edge. The surface corrections will be done in a manner that produces a surface texture as similar as possible to the adjacent sections. Grinding will be performed on the full width of the lane failing to meet the smoothness criteria. The cost of correcting the smoothness and associated traffic control shall be at contractor's expense.~~

~~**9.1.3.12.2 Primary and Secondary Arterials.** Pavement smoothness on Primary and Secondary arterials will be measured at Contractor's expense by a 25-foot California profilograph using a 0.2 inch blanking band. Run one trace three feet from the longitudinal joint between the lanes and another trace three feet from the shoulder or curb edge of the lane. Assure that the profilograph testing and evaluation is performed by a trained and certified operator. Within two days after the paving, furnish the Engineer with the profilogram and its evaluation. All pavements will be corrected at Contractor's expense to 15 inches per mile. Pavements with horizontal curves less than 300 feet and or vertical curves or transition areas with K values less than 30 will be excluded from the profilograph specification.~~

9.1.3.12.1Equipment. The IRI shall be computed from profile data collected with an inertial profiler (IP) that meets the requirements of AASHTO M 328. ProVAL software, or approved equipment, shall be used to compute IRI smoothness and locate areas of localized roughness (ALR) in accordance with MoDOT TM-59.

9.1.3.12.2 Profiling. Profiling will be applicable to the surface of all mainline paving and turning lanes on projects consisting of more than 0.35 lanes miles. Profiling may be waived by the Engineer if staging of the overall project affects the normal paving operation of the roadway.

Upon wavier, exempt areas shall be checked with a ten-foot straightedge and meet the requirements of 9.1.3.12.3.

9.1.3.12.3 Longitudinal Straightedging. Any pavement surface not measured with an inertial profiler shall be measured with a 10-foot straightedge. The straightedge path in the longitudinal direction for driving lanes will be located three feet from the outside edge. Additional paths with suspected roughness may be selected at the Engineer's discretion. Shoulders that are paved integrally with an adjacent driving lane will not require straightedging. Any variations in the longitudinal direction exceeding 1/8 inch in 10 feet shall be marked for correction in a manner approved by the Engineer.

9.1.3.12.4 Transverse Straightedging. The Engineer shall randomly check driving lanes, regardless of the smoothness measurement method used, for variations in the transverse direction with a 4-foot straightedge. Any variations in the transverse direction more than 1/4 inch shall be marked for correction in a manner approved by the Engineer.

9.1.3.12.5 Areas of Localized Roughness. All areas of localized roughness (ALR), defined as any length of pavement, with a continuous 25-foot average IRI of 175.0 inches/mile or greater, shall be corrected. After correcting ALRs, additional correction may be necessary to reduce any profile area to an average IRI of 125.0 inches/mile or less. The contractor shall re-profile the corrected lengths to verify smoothness compliance and submit an electronic data file in .PFF format to the Engineer within 48 hours after testing.

9.1.3.12.6 Method of Correction. Corrective action to eliminate ALRs and improve the average IRI shall be accomplished by a method approved by the Engineer. Diamond grinding may be used for bumps, but the use of an impact device, such as a bush hammer or milling machine, will not be permitted. Total grinding depth shall be limited to ¼ inch. The final surface texture of corrected pavement shall be comparable to adjacent sections that do not require correcting. Satisfactory longitudinal grinding is acceptable as the final surface of the corrected pavements.

9.1.3.~~12~~ 13 Protection and Opening to Traffic. The contractor shall protect the pavement against all damage prior to final acceptance of the work by the Engineer. Traffic shall be excluded from the pavement by erecting and maintaining barricades and signs for at least seven (7) days, or until the concrete pavement achieves a strength of 3,000 pounds per square inch.

9.1.3.~~13~~ 14 Paving by Slip Form. Slip-forming equipment will be accepted providing it produces a paving operation in compliance with all the foregoing requirements other than forms.

9.1.4 Method of Measurement. Final measurement will be made to the nearest 1/10 square yard for acceptable concrete pavement in place.

9.1.5 Basis of Payment.

Concrete pavement without integral curb shall be paid on a square yard basis and shall not include any curb or gutter. Curb and gutter shall be paid as a separate item.

10 SIDEWALKS AND DRIVEWAYS

10.1 SCOPE OF WORK. Sidewalks, sidewalk ramps, and driveways shall be constructed or reconstructed to the configuration, and to the lines and grades shown by the plans and generally after the curbing is constructed. Sidewalk ramp construction shall comply fully with all requirements in the most current ADA Standards for Accessible Design and the Public Right of Way Accessibility Guidelines (PROWAG).

10.2 MATERIALS

10.2.1 Concrete Mix. Sidewalks and driveways are to be constructed using a minimum of 28-day 4,000-psi Portland cement concrete in accordance with Chapter 6 of these General Conditions and Technical Specification.

10.2.2 Expansion Joints. Expansion joints shall be made with 1/2-inch thick bituminous preformed expansion joint filler of a non-extruding type conforming to ASTM Designation D1751, for the full depth of the concrete and precut to the width of the sidewalk.

10.2.3 Joint Sealer. Joint sealer is generally not requited unless shown on the plans.

10.2.4 Reinforcement. Reinforcement is only required when shown on the plans.

10.2. 5 Curing Compound. Curing compound shall conform to the requirements of ASTM Designation C309, Type 2.

10.2.6 Detectable Warning Tiles. Detectable warning surfaces and their components shall be manufactured and/or supplied in a ~~safety yellow~~red color ~~(or red typically in the downtown business district)~~ homogenous throughout the tile and matching the pattern shown in standard drawing ST-12 with a slip resistance surface, such as that manufactured by “Amor-Tile” or its equivalent.

10.3 CONSTRUCTION METHODS

10.3.1 Removal. Existing sidewalks, sidewalk ramps or driveways shall be totally removed to the nearest contraction or isolation joint, unless otherwise specified by the Engineer. Any partial section removal shall be saw cut full depth. The curb and gutter section in front of a driveway (radius point to radius point) shall be saw cut full depth and removed before the driveway is constructed. Any curb and gutter broken or cracked outside the radius points during this removal and or reconstruction shall also be removed and replaced accordingly. Any damage to the existing street shall be the responsibility of the contractor.

11 PLANT MIX BITUMINOUS BASE AND PAVEMENT

11.1 GENERAL

11.1.1 Description. This work shall consist of a bituminous mixture placed, spread and compacted as shown on the plans or as directed by the ~~e~~Engineer.

11.2 MATERIAL~~1.2 Material.~~

11.2.1 The grade of asphalt binder shall be PG 64-22 or as specified in the Special Provisions. When the plasticity index on individual aggregate fractions with 10 percent or more passing the No. 30 sieve exceeds 3, a moisture susceptibility test shall be required during the mix design process. If the plasticity index exceeds that of the material approved for the mix design, additional testing may be required.

11.2.2 Coarse Aggregate.~~ COARSE AGGREGATE~~

11.2.2.1 All coarse aggregate shall consist of sound, durable rock, free from cemented lumps or objectionable coatings. The percentage of deleterious substances shall not exceed the following values and the sum of percentages of all deleterious substances shall not exceed 8.0 percent.

Deleterious Material	Percent by Weight
Deleterious Rock	8.0
Mud Balls and Shale Combined	2.0
Clay, uniformly dispersed	3.0
Other Foreign Material	0.5

The above requirements apply to combined aggregates during production when used in accordance with these specifications.

If a density requirement is specified for asphaltic concrete, the total quantity of chert in each size or fraction of produced crushed stone aggregate, including that permitted as deleterious, shall not vary by more than 10 percent~~age points~~ from the quantity present in the aggregate used in the approved laboratory job mixtures.

Crushed stone shall be produced from rock of uniform quality. Rock tested from any combination of ledges ~~for source approval and trial mix samples~~ shall meet the following criteria~~.~~:

Property	Value
Los Angeles Abrasion, AASHTO T 96, percent loss, max.	55
Absorption, AASHTO T 85, percent, max.	4.5

11.2.2.2 Gravel aggregate shall be washed sufficiently to remove any objectionable coatings and shall meet the following criteria ~~for source approval and trial mix samples.~~:

Property	Value
Los Angeles Abrasion, AASHTO T 96, percent loss, max.	55
Absorption, AASHTO T 85, percent, max.	5.5

11.2.2.3 Steel slag consisting ~~principally~~primarily of a fused mixture of oxides and silicates shall be a synthetic aggregate produced as a by-product of the basic oxygen steelmaking process~~,~~ or electric arc ~~or open hearth~~ steel-making furnaces. ~~-~~The steel slag shall be aged at least three months after crushing and screening. Steel slag~~,~~ which has been previously crushed, screened, and aged three months will not be required to receive additional aging. ~~-~~Steel slag from one source shall not be blended with steel slag from a different source.

11.2.2.4 The aggregate shall be in accordance with the following requirements for the grade specified in the ~~c~~Contract or Job Special provisions. If grade is not specified, any listed grade may be used.

Percent Passing								
		Sieve Size						
Grade	**Type of Material**	**3/4 in.**	**1/2 in.**	**3/8 in.**	**#4**	**#8**	**#30**	**#200**
1	Crushed Stone or Porphyry	100	95 – 100	65 – 95	20 –55	2 – 20	….	0 – 5
2	Gravel	100	95 – 100	….	40 – 80	15 – 50	0 – 30	0 – 5
3	Chat	100	95 – 100	….	45 – 85	30 – 60	0 – 30	0 – 5

11.2.3 Fine Aggregate.~~FINE AGGREAGTE~~

Fine aggregate for asphaltic concrete shall be a fine, granular material passing the 3/8-inch sieve, naturally produced by the disintegration of rock of a siliceous nature and/or manufactured by the mechanical reduction of sound durable rock. With written approval from the ~~e~~Engineer and compliance with this specification, chat sand produced from flint chat in the Joplin area, dolomite chat as produced in the southeast lead belt area, fines manufactured from igneous rock, chert gravel or wet bottom boiler slag may be used as fine aggregate for asphaltic concrete. Fine aggregate shall be free from cemented or conglomerated lumps and shall not have any coating or injurious material.

The percentage of deleterious substances shall not exceed the following values:

Item	Percent by Weight
Clay lumps and shale	1.0
Total lightweight particles, including coal and lignite	0.5
Other deleterious substances	0.1

The total lightweight particle requirement will not apply to wet bottom boiler slag, angular chert sand or manufactured sand.

11.2.4 Mineral Filler. ~~MINERAL FILLER~~

Mineral filler shall be in accordance with AASHTO M 17.

11.2.5 Hydrated Line.~~HYDRATED LIME~~

Hydrated lime shall be thoroughly dry and free of lumps. Hydrated lime shall be in accordance with AASHTO M 303, Type I or II, except the gradation shall be determined in accordance with AASHTO T 37.

11.2.6 Performance Graded Asphalt Binder ~~ASPHALT BINDER~~ (PG) ~~GRADED~~.

11.2.6.1 General. Performance graded asphalt binder shall be an asphalt-based binder produced from petroleum either with or without the addition of non- particulate organic modifiers. Asphalt Binders shall be in accordance with AASHTO M 320 for the grade specified. The grade shall PG 64-22 or as specified in the Special Provisions.

11.2.6.2 Acceptance Procedures. The supplier shall certify that the bituminous material complies with the specification requirement. The supplier shall furnish the truck driver a copy of the bill of lading, manifest or truck ticket to be available to the ~~City of Springfield~~Engineer. This document shall provide the following information: type and grade of the material, specific gravity at 60°F, net gallons, consignee, truck number, identification number, weight of truck before and after loading, destination, date loaded, name and location of source.

11.2.6.3 Test Methods. Asphalt Materials must meet specifications as follows:

Property	Test Method
Sampling	AASHTO T 40
Water	AASHTO T 55
Flash Point (Cleveland Open Cup)	AASHTO T 48
Solubility in Trichloroethylene	AASHTO T 44
Viscosity (Rotational)	ASTM D 4402
Dynamic Shear	AASHTO 315
Rolling Thin Film Oven Test	AASHTO T 240
Pressure Aging Test	AASHTO R 28
Creep Stiffness	AASHTO T 313

11.2.7~~6.4~~ Recycled Asphalt Material. Recycled asphalt materials shall be in accordance with Specification following:

~~Item~~	~~Percent by Weight~~
~~Clay lumps and shale~~	~~1.0~~
~~Total lightweight particles, including coal and lignite~~	~~0.5~~
~~Other deleterious substances~~	~~0.1~~

Deleterious Material	Percent by Weight
Deleterious Rock	8.0
Mud Balls and Shale Combined	2.0
Clay, uniformly dispersed	3.0
Other Foreign Material	0.5

~~**11.6.5 Reclaimed Asphalt Pavement.** Reclaimed Asphalt Pavement (RAP) may be used in mixture. All RAP material shall be tested in accordance with AASHTO T 327.~~

~~**11.6.6 Reclaimed Asphalt Shingles.** Reclaimed Asphalt Shingles (RAS) may be used up to 3% total in base mixture specified to use PG 64-22 in accordance with AASHTO PP 53 except as follows: When the ratio of virgin effective binder to total binder in the mixture is between 60 and 70 percent, the grade of the virgin binder shall be PG 52-28 or PG 58-28. Shingles shall be ground to 3/8-inch minus. Waste, manufacturer or new, shingles shall be essential free of deleterious materials. Post-consumer RAS shall not contain more than 1.5 percent wood by weight or more than 3.0 percent total deleterious by weight. Post-consumer RAS shall be certified to contain less than the maximum allowable amount of asbestos as defined by national or local standards. The gradation of the aggregate may be determined by solvent extraction of the binder or using the following as a standard gradation:~~

~~Shingle Aggregate Gradation~~	
~~Sieve Size~~	~~Percent Passing by Weight~~
~~3/8 in.~~	~~100~~
~~No. 4~~	~~95~~
~~No. 8~~	~~85~~
~~No. 16~~	~~70~~
~~No. 30~~	~~50~~
~~No. 50~~	~~45~~
~~No. 100~~	~~35~~
~~No. 200~~	~~25~~

11.2.7.1~~6.6~~ Reclaimed Asphalt. A maximum of 20 percent virgin effective binder replacement may be used in mixtures ~~without changing the grade of binder~~. The asphalt binder content of recycled asphalt materials shall be determined in accordance with AASHTO T 164, ASTM D 2172 or other approved method of solvent extraction. A correction factor for use during production may be determined for binder ignition by burning a sample in accordance with AASHTO T 308 and subtracting from the binder content determined by extraction. The aggregate specific gravity shall be determined by performing AASHTO T 209 in calculating the G_{se}~~se~~ to use in lieu of G_{sb}~~sb~~ as follows:

$$G_{se} = \frac{100 - P_b}{\frac{100}{G_{mm}} - \frac{P_b}{G_b}}$$

11.2.7.2 Reclaimed Asphalt Pavement. Reclaimed Asphalt Pavement (RAP) may be used in mixture. All RAP material shall be tested in accordance with AASHTO T 327.

11.2.7.3 Reclaimed Asphalt Shingles. Reclaimed Asphalt Shingles (RAS) may be used up to 3% total in base mixture specified to use PG 64-22 in accordance with AASHTO PP 53. Shingles shall be ground to 3/8-inch minus. Waste, manufacturer or new, shingles shall be essential free of deleterious materials. Post-consumer RAS shall not contain more than 1.5 percent wood by weight or more than 3.0 percent total deleterious by weight. Post-consumer RAS shall be certified to contain less than the maximum allowable amount of asbestos as defined by national or local standards. The gradation of the aggregate may be determined by solvent extraction of the binder or using the following as a standard gradation:

Shingle Aggregate Gradation	
Sieve Size	Percent Passing by Weight
3/8 in.	100
No. 4	95
No. 8	85
No. 16	70
No. 30	50
No. 50	45
No. 100	35
No. 200	25

11.3~~6.7~~ ~~Composition of Mixtures~~COMPOSITION OF MIXTURES.

11.3.1 Aggregate sources shall be from the specific ledge or combination of ledges within a quarry, or processed aggregate from a particular product, as submitted in the mix design. The total aggregate prior to mixing with asphalt binder shall be in accordance with the following gradation requirements:

Sieve Size	Percent Passing by Weight			
	Base	**BP-1**	**BP-2**	**BP-3**
1 inch	100	100	100	100
3/4 inch	85-100	100	100	100
1/2 inch	60-90	85-100	95-100	100
3/8 inch	---	---	---	100
No. 4	35-65	50-70	60-90	90-100
No. 8	25-50	30-55	40-70	---
No. 16	---	---	---	30-60
No. 30	10-35	10-30	15-35	---
No. 200	6-12	5-12	5-12	7-12

11.46.8 Job Mix FormulaJOB MIX FORMULA. .

11.4.1 At least 30 days prior to placing any mixture on the project, the eContractor shall submit a mix design for verification and approval by Constructionthe Engineer. The mixture shall be designed in accordance with Asphalt Institute Publication MS-2, *Mix Design Methods for Asphalt Concrete and Other Hot-Mix Types*. The mixture shall be compacted and tested at a minimum of three asphalt contents separated by a maximum of 0.5 percent in accordance with AASHTO T 245, except as specified herein noted. The test method shall be modified by short-term aging the specimens in accordance with AASHTO R 30. A detailed description of the mix design process shall be included with the job mix formula.

11.4.26.9 Required Information. The mix design shall include raw data from the design process and shall contain the following information:

A. Source, grade and specific gravity of asphalt binder.
B. Source, type (formation, etc.), ledge number(s) if applicable, gradation, and deleterious content of the aggregate.
C. Plasticity index of each aggregate fraction.
D. Bulk and apparent specific gravities and absorption of each aggregate fraction in accordance with AASHTO T 85 for coarse aggregate and AASHTO T 84 for fine aggregate, including all raw data.
E. Specific gravity of hydrated lime, mineral filler or baghouse fines, if used, in accordance with AASHTO T 100.
F. Percentage of each aggregate component.
G. Combined gradation of the job mix.
H. Percent of asphalt binder, by weight, based on the total mixture.
I. Bulk specific gravity (Gmb) by AASHTO T 166, Method A of a laboratory compacted mixture.
J. Percent air voids (Va) of the laboratory compacted specimen.
K. Voids in the mineral aggregate (VMA) and voids in the mineral aggregate filled with asphalt binder (VFA).
L. Theoretical maximum specific gravity (Gmm) as determined by AASHTO T 209 and AASHTO R 30.
M. Mixing temperature and molding temperature.

N. Bulk specific gravity (Gmb) of the combined aggregate.
O. Percent chert contained in each aggregate fraction.
P. Baghouse fines added for design.
    1. Batch and continuous mix plants – Indicate which aggregate fraction to add baghouse percentage during production.
    2. Drum mix plants – Provide cold feed settings with and without baghouse percentage.

11.4.3~~6.10~~ Mixture Approval. No mixture will be accepted for use until the job mix formula for the project is approved by ~~Construction~~the Engineer. The job mix formula approved for each mixture shall be in effect until modified in writing by the ~~e~~Engineer. When unsatisfactory results or other conditions occur, or should a source of material be changed, a new job mix formula may be required.

11.4.4~~6.11~~ Mixture Characteristics.

Base, BP-1 and BP-2 mixtures shall have the following properties, when tested in accordance with AASHTO T 245. ~~The number of blows with the compaction hammer shall be 35 or t~~The number of gyrations shall be 35 with ~~the~~ a gyratory compactor. BP-1 and BP-2 mixtures shall have between 60 and 80 percent of the VMA filled with asphalt binder. BP-3 mixtures shall have a minimum 75 percent of the VMA filled with asphalt binder. The ratio of minus 200 materials ~~and dust~~ to effective asphalt binder (P_{be}) ~~ratio of~~shall be no less than 0.~~9~~ 8 ~~to~~ and no greater than ~~2.0~~1.6.

Mix Type	Percent Air Voids	AASHTO T 245 Stability lb	Minimum Voids in Mineral Aggregate (VMA)
BB	3.5	750	13.0[a]
BP-1	3.5	750	13.5
BP-2	3.5	750	14.0
BP-3	3.5	750	15.0

[a]Bituminous base mixtures that would require 12.0 percent VMA following Asphalt Institute MS-2 will have a minimum 12.0 percent requirement.

11.4.5~~6.12~~ Moisture Susceptibility. Moisture susceptibility may be tested in accordance with AASHTO T 283. A minimum retained strength of 70 percent shall be obtained when tested for moisture susceptibility. ~~–~~An approved anti-strip additive may be added to increase retained strength to a passing level.

11.4.6~~6.13~~ Time Limit. A mix design may be transferred to other projects for a period of three years from the original approval date provided satisfactory results are obtained during production and placement.

11.5~~6.14~~ GRADATION AND DELETERIOUS CONTENT CONTROL~~Gradation and Deleterious Content Control.~~

11.5.1 –In producing mixtures for the project, the plant shall be operated such that no intentional deviations from the job-mix formula are made. The ~~c~~Contractor shall determine on a daily basis at minimum, the gradation on the aggregate reclaimed from the RAP by either extraction or binder ignition. The gradation results shall be used to determine the daily specification compliance for the combined gradation. Mixtures as produced shall be subject to the following tolerances and control.

A. The maximum variations from the approved job-mix formula shall be within the tolerances as shown in the table below:

Sieve Size	Percent Passing by Weight	
	Tolerance	**Action Limit**
No. 8a	± 5.0	± 10.0
No. 200	± 2.0	± 4.0

[a] Use No. 16 sieve for BP-3

B. The deleterious content of the material retained on the No. 4 sieve shall not exceed the limits specified as follows:

Deleterious Material	Percent by Weight
Deleterious Rock	8.0
Shale	1.0
Other Foreign Material	0.5

C. If the plasticity index of any fraction exceeds that of the material approved for the mix design, additional testing may be required.

D. The quantity of asphalt binder introduced into the mixer shall be the quantity specified in the job-mix formula. No changes shall be made to the quantity of asphalt binder without written approval from the ~~e~~Engineer. The quantity of asphalt binder determined by tests on the final mixture shall not vary by more than ± 0.3 percent from the job-mix formula.

11.5.2~~6.15~~ Sample Location. The gradations of the total aggregate will be determined from samples taken from the hot bins on batch-type plants or continuous mixing plants or from the composite cold feed belt on drum mix plants. The deleterious content of the total aggregate shall be determined from samples taken from the composite cold feed belt. When required, samples for plasticity index shall be taken from the stockpile. The RAP shall be sampled from the RAP feeding system on the asphalt plant. Samples for asphalt content determination may be taken at the plant.

11.5.3~~6.16~~ Moisture Content. The bituminous mixture, when sampled and tested in accordance with AASHTO T 329, shall contain no more than 0.5 percent moisture by weight of the mixture.

11.5.4~~6.17~~ Contamination. The bituminous mixture shall not be contaminated with deleterious agents such as unburned fuel, objectionable fuel residue or any other material not inherent in the job mix formula.

11.6 ~~.18 Laboratory.~~LABORATORY

11.6.1 The laboratory shall contain certified equipment to perform all testing. The laboratory may be used at anytime by ~~engineering~~ the City of Springfield to perform compliance testing.

11.7 CONSTRUCTION REQUIREMENTS

11.7.1 Weather Limitations. Bituminous mixtures shall not be placed on any wet surface or frozen pavement. No paving will be permitted under 45°-F. Temperatures shall be obtained in accordance with MoDOT Test Method TM 20.

11.7.2 Bituminous Mixing Plant. The plant shall be specifically designed for satisfactorily heating, drying, and mixing bituminous mixtures. Plant scales and equipment shall be calibrated annually and provided to the ~~e~~Engineer upon request. The asphalt plant shall be equipped with an automatic ticket printer connected to the weighing system in such a manner that the printer automatically detects and prints the weight determined by the system. The printing system shall be capable of keeping and printing cumulative totals for asphalt mixtures for each project. The tickets shall show the following:

A. Gross and Tare weights
B. Current date and time
C. Mix type
D. Unique ticket number
E. Job number, route

11.7.3 Subgrade Preparation. The subgrade upon which the bituminous mixture is to be placed shall be substantially uniform in density throughout the entire width of the subgrade. The subgrade shall be constructed to drain surface water to the side ditches and all ditches shall be kept open by ~~c~~Contractor. The subgrade shall be checked after rolling and, if not at the proper elevation at all points, sufficient material shall be removed or added and compacted to bring all portions of the subgrade to the required elevation and density. For base widening work, the bottom of the trench shall be compacted until further consolidation is not visually evident, by use of a trench roller having a weight of no less than 300 psi of width of rear roller, or by mechanical tampers or other methods approved by the ~~e~~Engineer. Suitable excavated material may be used in shouldering operations. On the outside of curves, the design depth of trench at the beginning of the superelevation transition shall be varied gradually to the minimum depth at the end of the superelevation transition. Slight transitioning of the width of the base widening will be necessary to permit the indicated angle of repose or shear angle outside of the ultimate edge of surface. The bottom of the trench shall in no case be less than 3 inches below the surface of the existing pavement. All surplus excavated material shall be disposed of by the ~~c~~Contractor in areas to be secured by the ~~c~~Contractor beyond the right of way limits. An acceptable written agreement with the property owner on whose property the material is placed shall be submitted to the ~~e~~Engineer.

11.7.4 Tack coat. This work shall consist of preparing and treating an existing bituminous or concrete surface with bituminous material. Tack coat material shall be applied anytime a surface course is place on an intermediate course. All pavement surfaces that have been in place longer

than one (1) calendar day shall have a tack coat and for those less than one (1) day it shall be at the discretion of the Engineer.

11.7.4.1~~5~~ Material. All material shall be specifically as follows:

Emulsified Asphalt (SS-1, SS-1H, CSS-1 or CSS-1H) shall meet AASHTO M 208

11.7.4.2~~6~~ Application. Asphalt emulsion shall be applied uniformly with a pressure distributor that is certified by the ~~e~~Engineer prior to use, and the ~~c~~Contractor shall furnish all equipment, material and assistance necessary if calibration is required. The rate of application ~~will be specified in the contract or as revised by the engineer to~~shall be within a minimum of 0.02 gallons per square yard and a maximum of 0.10 gallons per yard as directed by the Engineer. Water may be added to the emulsion resulting in a mixture that will contain no more than 50 percent water. The asphalt emulsion will heated at time of application and spread at the specified rate. The temperature chart for emulsions and RC and MC liquid asphalts follows. The tack shall be properly cured and the tack surface shall be cleaned of all dirt and surplus before the next course is placed.

11.7.5~~7~~ Prime Coat. If required by the Contract, ~~T~~this work shall consist of preparing and treating an existing surface with bituminous material in accordance with these specifications.

~~A. RC liquid asphalt shall meet AASHTO M 81~~
~~B. MC liquid asphalt shall meet AASHTO M 82~~

11.7.5.1~~8~~ Material. The type and grade of bituminous material will be specified in the contract. All material shall be specifically as follows:

Item	Test Method
RC Liquid Asphalts	AASHTO M 81
MC Liquid Asphalts	AASHTO M 82
Emulsified Asphalt	AASHTO M 140

~~Item~~
~~Type RC and MC Liquid Asphalts~~
~~Emulsified Asphalt~~

11.7.5.2~~9~~ Application. The surface to be primed shall be shaped to the required grade and cross section, shall be free from any segregated materials or other irregularities, and shall be uniformly compacter by rolling. Bituminous material shall be applied to the width of the section to be primed by means of a pressure distributer in a uniform, continuous spread. The application rate shall be ~~specified in the contract, or revised by the engineer~~ between 0.2 and 0.5 gallons per square yard as directed by the Engineer. The primer shall be heated at time of application as follows:

Bituminous Material	Temperature, Degrees Fahrenheit			
	Spraying		Mixing	
	Min	Max	Min	Max
Asphalt Binder				
PG 46-28	260	325	----	----
All Other Grades	285	350	275	350
Liquid Asphalt RC-MC				
Grade				
30	70	150	50	110
70	100	180	90	140
250	150	220	130	170
800	180	260	170	210
3000	210	290	200	240
Asphalt Emulsions				
RS-1	70	140	----	----
RS-2	125	185	----	----
SS-1	70	160	70	160
SS-1h	70	160	70	160
CRS-1	125	185	----	----
CRS-2	125	185	----	----
CSS-1	70	160	70	160
CSS-1h	70	160	70	160
EA-90P	130	180	----	----
CRS-2P	130	180	----	----

11.7.6~~10~~ Hauling Equipment. Trucks used for hauling bituminous mixtures shall have tight, clean, smooth, metal beds that have been thinly coated with an approved bituminous mixture release agent. Use of diesel fuel or other detrimental products will not be permitted. Each truck shall have a cover of canvas or other suitable material to protect mixture from weather.

11.7.7~~11~~ Spreading. The base course, primed surface, or preceding course or layer shall be cleaned of all dirt, packed soil or any other foreign matter prior to spreading the bituminous mixture. The mixture shall be spread in the number of layers and in the quantity required to obtain the compacted thickness and cross section shown on the plans. When placing multiple layers with varying thicknesses, the thicker layer shall be placed first. The compacted thickness of a single layer of bituminous pavement mixture shall be no more than 2 inches for the surface course and 4 inches for the leveling course.

11.7.7.1~~12~~ Irregularities. The mixture shall be spread without tearing the surface and struck off such that the surface is smooth and true to cross section, free from all irregularities, and of uniform density throughout. Care shall be used in handling the mixture to avoid segregation. Areas of segregated mixture shall be removed and replaced with a suitable mixture at the ~~c~~Contractor's expense. The outside edge alignment shall be uniform. Irregularities shall be corrected by adding or removing mixture before compacting. Segregated mixtures shall be removed and replaced to the limits determined by the ~~e~~Engineer.

11.7.7.2~~13~~ Leveling Course. ~~–~~If required by the contract, a leveling course consisting of a layer of variable thickness shall be spread to the desired grade and cross section to eliminate irregularities in the existing surface. Spot-leveling operations over small areas, with feather-edging at high points and ends of spot areas, may be required prior to placing the leveling course. Rigid control of the placement thickness of the leveling course will be required. The mixture shall be ~~practically~~ free from segregation.

11.7.7.3~~14~~ Base Widening. The specified total thickness of base widening shall be completed to the adjacent traveled way elevation as shown on the plans. Additional thickness of base widening may be placed as required prior to coldmilling, at the ~~c~~Contractor's expense, and shall subsequently be coldmilled to the same elevation as the traveled way, if conducive to expedite operations. On base-widening work, a succeeding layer of bituminous mixture may be placed the same day as the previous layer, if it can be shown that the desired results are being obtained. On small areas, and on areas that are inaccessible to mechanical spreading and finishing equipment, the mixture may be spread and finished by hand methods if permitted by the ~~e~~Engineer. At least one lane of the existing pavement and the adjacent shoulder shall be kept open to traffic at all times during construction, except for short intervals when the movement of the ~~c~~Contractor's equipment will seriously hinder the flow of traffic. Intervals during which the ~~c~~Contractor will be allowed to halt traffic shall be as designated by the ~~e~~Engineer. The ~~c~~Contractor shall not open more trench ahead of the first layer of the base widening than is necessary for placing that layer in one half a day's operations. The first layer of the base widening shall not be placed for a greater distance ahead of the second layer than is necessary for placing the second layer in one half a day's operations. The second layer shall not be placed for a greater distance ahead of the final layer than is necessary for placing the final layer in one day's operation. Any changes in these lengths shall be made only with written permission from the ~~e~~Engineer.

11.7.7.4~~15~~ Edge Differential. For roadways constructed under traffic, no pavement edge differential shall be left in place for more than seven days, unless approved by the ~~e~~Engineer.

11.7.8~~16~~ Surfaced Approaches. At locations designated in the contract or as specified by the ~~e~~Engineer, approaches shall be shaped to the required grade and cross section, shall be free from all ruts, corrugations, segregated material or other irregularities, and shall be uniformly compacted to City of Springfield standards by rolling. The bituminous surface shall be placed as shown on the plans or as directed by the ~~e~~Engineer. Approaches shall not be surfaced before the surface course adjacent to the entrance is completed. No direct payment will be made for any work required to condition and prepare the subgrade on the approaches.

11.7.9~~17~~ Joints. The minimum density of all traveled way pavement within 6 inches of a longitudinal joint, including the pavement on the traveled way side of the shoulder joint, shall be no less than 2.0 percent below the specified density. Once an established procedure has been demonstrated to provide the required density for longitudinal joints, at the ~~e~~Engineer's discretion, the procedure may be used in lieu of density tests provided no changes in the material, typical location or temperatures are made. Pay adjustments due to longitudinal joint density shall apply to the full width of the lane paved. Adjustments due to joint density shall apply to the day's production from which the cores are obtained. Transverse joints shall be formed by cutting back on the previous run to expose the full depth of the layer. When a transverse vertical edge is to be left in place and opened to traffic, a temporary depth transition shall be constructed as approved by the

~~e~~Engineer. The longitudinal joints in one layer shall offset those in the layer immediately below by approximately 6 inches. The joints in the final surface layer shall be at the lane lines of the traveled way, except that the placement width shall be adjusted such that pavement marking shall not fall on a longitudinal joint. Each side of the joint shall be flush and along true lines.

~~**11.7.18 Compaction.** The compacted mixture shall have a minimum density of 92 percent of the theoretical maximum specific gravity. Density will be determined by a specific gravity method. When the contractor elects to place a lift of mixture greater than six times the nominal maximum aggregate size, cores shall be cut in half and the density of each half determined separately. In lieu of density requirements, mixtures used for wedging, transitions, shoulders, temporary bypasses to be maintained at the expense of the contractor, shall be thoroughly compacted by at least three complete coverages over the entire area with either a pneumatic tire roller weighing no less than 10 tons, a tandem-type steel wheel roller weighing no less than 10 tons or an approved vibratory roller. Rolling shall be performed at proper time intervals on each layer and shall be continued until there is no visible evidence of further consolidation.~~

11.7.~~19~~10 Pavement Thickness. It is the intent of these specifications that the plant mix bituminous surface course shall be constructed strictly in accordance with the thickness shown on the plans. The thickness of both the plant mix bituminous surface course and the plant mix bituminous base course will be measured, and where thickness is found to be deficient, corrective actions will be taken as follows. The thickness of the bituminous course will be measured and determined by the average caliper measurement of the cores. For the purpose of determining the constructed thickness the cores taken for density results will be measured for thickness and reported to the nearest tenth. In addition, cores may be taken at other locations as may be determined by the ~~e~~Engineer. If the measurement of any core is deficient of one-half (1/2) inch from plan thickness, additional cores will be taken at twenty-five (25) foot intervals parallel to centerline ahead and back of the affected location until the extent of the deficiency has been determined. It will be assumed that each core is representative of the total combined thickness for a distance extending one-half the distance to the next core, measured along centerline, or in the case of a beginning or ending core, the distance extend to the end of pavement section. In those areas of deficient thickness in excess of one-half (1/2) inch that cannot be corrected without affecting the plan crown and grade, the ~~e~~Engineer has the option of requiring that defective pavement will be removed and replaced with a bituminous course of proper thickness or leaving in place and require the following deductions in payment.

Deficiency in Thickness	Deduction Percent of Contract Unit Price
0 inch to ½ inch	None
Over ½ inch and not over ¾ inch	50
Over ¾ inch and not over 1 inch	100

No additional compensation will be allowed the ~~c~~Contractor for any plan mix bituminous pavement constructed in excess of the thickness requirement so he plans and specifications. The surface from which the cores have been taken shall be restored by the ~~c~~Contractor within 48 hours using a mixture acceptable to the Engineer.

If removal of the pavement is required, the ~~c~~Contractor will be required to remove the pavement and to replace it with one of a satisfactory quality and thickness which, when accepted, will be included in the pay quantities. No payment will be made for any costs incurred in the removal of

the pavement deficient in thickness or for the original pavement placement.

11.8~~7.20~~ QUALITY CONTROL~~Quality Control.~~

The ~~c~~Contractor shall maintain equipment and qualified personnel to perform QC field inspection, sampling and testing in accordance with this~~City of Springfield~~ specification.
~~A proposed third party for dispute resolution shall be included with the mix design submittal.~~

11.8.1~~7.21~~ Mixture Testing. The ~~c~~Contractor shall test the mixture at least once every 750 tons of production or a minimum of once per day for the gradation, deleterious content, and the asphalt content. If RAP is used and AASHTO T 308 is used to determine the asphalt content, the binder ignition oven shall be calibrated in accordance with MoDOT Test Method TM 77. At the ~~e~~Engineer's discretion, testing may be waived when production does not exceed 150 tons per day. The ~~c~~Contractor shall certify the proper proportions of a previously proven mixture were used. The final field mix acceptance will be based on the items below:

Tested Property	**Test Method**	**Contractor Testing Frequency**
Effective Asphalt to Minus No.200		1/Lot
Mat Density (% of Laboratory Max. Theoretical density)	AASHTO T 166	1Set/Lot (4/ Set)
Unconfined Joint Density (% of Laboratory Max. Theoretical Density)	AASHTO T 166	1Set/ Lot (4/ Set)
Gradation & Deleterious content	AASHTO T 27 AASHTO T 11	1/Lot
Asphalt Content	AASHTO T 164 AASHTO T 287 AASHTO T 308	1/Lot
Asphalt content of RAP	AASHTO T 164	1/Project
VMA @ Ndes	AASHTO T 312	1/Lot
Va @ Ndes	AASHTO T 312	1/Lot
Theoretical Maximum SG of Mixture	AASHTO T 209	1/Lot

11.8.2~~7.22~~ Failing Test. If a~~, deleterious content~~Va, Vma, Dust to Effective Binder ratio, Density, or ~~asphalt~~ Asphalt ~~content~~ Content test result falls outside of the specification tolerances, a review or adjustment of the plant settings and production shall be made and another sample shall be immediately taken. If the second test falls outside of the specification tolerances, production shall be immediately ceased until the mixture can be brought back into specification. ~~If a gradation test falls between the Tolerance and Action Limits, adjustments to plant shall be made and another gradation shall be taken immediately.~~ Plant production for the following day shall not resume until

the mixture is brought back into specification. when the final gradation for the day is not within tolerance. If a gradation test falls outside the Action LimitJob Mix Formula, production shall cease until the mixture is brought back into specification.

11.8.2.1 Payment Adjustments and Removal Limits. Payment for mixture placed at or below the required minimum tolerances will be adjusted or removed as follows:

Test Property	Tolerance Limit/Action Plan[a]	Deduction	Removal Limit
Effective Asphalt to Minus No. 200	0.8 to 1.6	See Chapter 2 Article 14.02.D	See Chapter 2 Article 13
Mainline Density	90 to 96	See 11.8.5.1	See 11.8.5.1
Joint Density	88 to 96	See 11.8.5.1	See 11.8.5.1
Asphalt Content	±0.3% From Job Mix Formula	See Chapter 2 Article 14.02.D	See Chapter 2 Article 13
Vma @ Ndes	-1.0% to +2.0% From Job Mix Formula	See Chapter 2 Article 14.02.D	See Chapter 2 Article 13
Va @ Ndes	2.7% to 5%	2.5% to 2.7% 10% of Contract Unit Price	Below 2.5%

[a]Contractor shall notify the Construction Inspector immediately of all tests that fall outside of the specification tolerances.

11.8.37.23 Retained Samples. One half of the cContractor's sample for gradation, deleterious content, plasticity index, and asphalt content and all cores shall be retained for the eEngineer. The cContractor shall retain the samples for 7 days after testing has been completed and the results accepted by the eEngineer.

11.8.47.24 Pavement Testing. During construction, the eEngineer will designate as many tests as necessary to ensure that the course is being constructed of proper thickness, composition and density. Density of the roadway shall be determined by a daily sample consisting of four mainline cores and four joint cores obtained by the cContractor at stratified random locations selected by the eEngineer. A joint density sample shall consist of four cores taken from alternating sides of the lane placed at random locations selected by the eEngineer. The daily Field G_{mm} maximum theoretical density shown on the job mix formula shall be used in the calculation for this determination. Samples, minimum 4 Four inch diameter cores samples, shall be taken the full depth of the layer to be tested. The cContractor shall restore the surface from which samples have been taken immediately with the mixture under production.

11.8.5 Density. The compacted mixture shall have a minimum density of 92.0 percent determined by the specific gravity method. The Contractor shall calculate the G_{mm} from material obtained behind the paver for each set of cores representing that lot. When the contractor elects to place a lift of mixture greater than six times the nominal maximum aggregate size, cores shall be cut in half and the density of each half determined separately.

11.8.5.1~~7.25~~ Density Adjustment. Payment for mixture placed at or below the required minimum density will be adjusted as follows.~~:~~ Joint cores only apply to cores within six inches of unconfined joints.

~~Field Density Percent of Maximum Theoretical~~ Mainline Density (from Field G_{mm})	Percent of Contract Unit Price[a]	Joint Density (from Field G_{mm})	Percent of Contract Unit Price[a]
92~~1.5~~ or above	100%	90 or above	100%
~~91.0~~91.9 to 91.5~~4~~, inclusive	97%	89.9 to 89.5, inclusive	90%
91.4~~0.5~~ to 91.0~~0.9~~, inclusive	94%	89.0 to 89.4, inclusive	85%
90.9~~0~~ to 90.~~4~~5, inclusive	90%	88.5 to 88.9, inclusive	80%
90.4~~89.5~~ to 90.0 ~~89.9~~, inclusive	85~~0~~%	88.0 to 88.4, inclusive	75%
Below 90.0 ~~89.5~~	Remove and Replace	Below 88.0	Remove and Replace

[a] When adjustments are necessary, the lower percent of the contract unit price of either the pavement or joint density adjustment will apply.

11.9~~7.26~~ Quality Assurance. Acceptance tests will be performed by a certified city representative at the ~~c~~Contractor's laboratory at a rate of one independent sample per day when production exceeds 500 tons per day. A favorable comparison will be considered when the owners test is within the specification tolerances. At least once for every five days of production, a split of the ~~c~~Contractor's sample will be tested. If the results of the split sample are not within five percent on all sieves above the No. 200, two percent on the No. 200, within the specification ranges on the deleterious content, within two percentage points on the plasticity index, and within 0.5 percent on the asphalt content from the ~~c~~Contractor's results, another split sample will be taken jointly with the ~~c~~Contractor and tested. If the second test results do not compare within the specification tolerances, production shall cease until the discrepancy is resolved. If the second test results compare within the above tolerances, production may continue.

11.10~~7.27~~ Surface Smoothness. The finish of the pavement surface shall be substantially free from waves or irregularities, ~~and~~ shall be true to the established crown and grade,~~.~~ and shall be in accordance with Chapter 9.1.3.12.

11.11~~7.28~~ Defective Mixture. Any mixture showing an excess of bituminous material or that becomes loose and broken, mixed with dirt, or is in any way defective, shall be removed and replaced with a satisfactory mixture, which shall be immediately compacted to conform with the surrounding area.

11.12~~7.29~~ Basis of Payment. The accepted quantities of plant mix bituminous pavement and base course will be paid for at the contract unit price for each of the pay items included in the contract. No Payment for obtaining and delivering samples of compacted mixture from the base and

replacement of the surface will be made.

14.2.3.10 Dimensions. The dimensions of all conduit shall be in accordance with the plans.

14.2.4.1 Pull Boxes. Pull boxes may be cast-in-place concrete, precast concrete, preformed polymer concrete or preformed fiberglass reinforced polymer concrete as shown on the plans. Each pull box shall be equipped with four (4) galvanized steel or brass cable hooks with a minimum diameter of 3/8 inch and a minimum length of 5 inches.

14.2.4.2 Preformed Pull Boxes. Preformed pull boxes shall withstand a wheel load of 20,000 pounds. Pull box walls may be either flared or vertical. Pull boxes shall have a collar or ring at the top that will allow for securing the concrete apron. Metal conduit, if used in preformed pull boxes, shall be electrically bonded to one another inside each pull box.

14.2.4.3 Cast-In-Place Concrete Pull Boxes. Cast-in-place concrete pull boxes shall be constructed Class B concrete in accordance with MoDOT Standard Specifications. Pull boxes shall be cast in a neat and clean manner. See *Standard Drawing TS-3: Cast-in-Place Pull Box.*

14.2.4.4 Pull Box Covers. Preformed pull boxes shall be equipped with a bolt down cover. The threaded hole that receives the cover lock-down bolt shall be open at the bottom to allow the cleanout of sand, dirt and other debris. Lock-down bolts shall be stainless steel or brass with a penta-head. Frames and covers for cast-in-place and precast concrete pull boxes shall be cast iron in accordance with AASHTO M105, Class 30, and shall be of the dimensions shown on the plans. Preformed pull box covers shall be polymer concrete and shall meet a load category of Tier 15 and have a ~~minimum wheel~~ design load rating of ~~20~~15,000 pounds ~~(9000 kg)~~ and a test load of 22,500 pounds, all of which meet the ANSI/SCTE 77 specification. A lift opening shall be provided on all covers. Covers for pull boxes to be used for traffic signals shall be embossed with "TRAFFIC SIGNALS". Covers for pull boxes to be used for fiber optics shall be embossed with “TRAFFIC SIGNAL FIBER OPTICS”.

14.2.5.1 Signal Post and Mast Arm Pre-Approval. Fabricators shall submit five (5) copies of shop drawings and supporting calculations to the Engineer. Submittals shall be approved by the Engineer in writing prior to fabrication of the signal posts and mast arms. Shop drawings shall indicate complete design details required for post and mast arm fabrication, including material grades and thicknesses, welding and orientation of any longitudinal seams. The projected areas and weights (masses) of signs and signals used in the design of the post and mast arms shall be shown on the shop drawings. Design details for all possible post and mast arm combinations shown on the plans may be submitted. Shop drawings shall provide post and mast arm installation and hardware details. All welding procedures shall be prepared by the manufacturer as a written procedure specification and shall be submitted with the shop drawings for approval. Approval of the weld procedures will be required before approval of the shop drawings. Shop drawings shall indicate the specific approved welding procedure to be used for each joint. Shop drawings and supporting stress calculations shall be signed and sealed by a registered professional engineer in the State of Missouri. Manufacturers shall submit all required documentation, in accordance with ~~XIV.B.5.2.6~~14.2.5.2.6. Upon written approval, pre-approved drawings may be used on any project where the design conditions of the shop drawings are not exceeded.

provisions. Except as herein modified, Type 2070~~170E~~ ATC controller assemblies shall be in full compliance with the most current "Transportation Electrical Equipment Specifications (TEES)" and "Qualified Products List (QPL)" issued by the State of California, Business, Transportation & Housing Agency: Department of Transportation (Caltrans), and all revisions and addenda thereto current at the time the project is advertised. The Contractor shall provide a certification that the equipment proposed is included on the most current "Qualified Products List (QPL)" of Caltrans. Exception: City specific equipment that is not defined in the Caltrans specification is exempt from this QPL requirement. In case of conflict, the City's specifications shall govern. Prior to shipping to the project site, each traffic controller assembly shall be delivered to the Traffic Signal Shop for testing. Minimum test period shall be 14 days.

14.2.11.2.1 Controller. Except as herein modified, the Microcomputer 2070~~170E~~ ATC controller with 1C module shall be in accordance with the Caltrans "Transportation Electrical Equipment Specifications (TEES)", dated March 12, 2009, and all applicable errata and addenda, which shall form a part of these specifications. Certification shall be provided that the equipment proposed is included on the most current "Qualified Products List (QPL)" of Caltrans. The Type 2070~~170E~~ ATC microcomputer controller shall be fully compatible with McCain's~~BiTran~~ software. ~~The C2, C20, C30 and C40 connectors shall be amp standard. One spare set of internal printed circuit boards shall be furnished with each controller unit. This shall include, but is not limited to, the power supply, front panel, I/O, central processing unit and modem if specified.~~

~~**14.2.11.2.2 Master Controller.** If a master controller or master coordination unit is specified in the plans, the master controller shall be a Type 170E controller. This controller shall be in addition to the intersection controller and shall be installed in the same cabinet unless otherwise specified on the plans.~~

~~**14.2.11.2.3 Diagnostic Test Program.** For each ten or fewer Model 170E controllers purchased, a Diagnostic Test Program Prom Chip shall be provided. The Diagnostic Test Program Prom Chip shall test the operation of the Model 170E controller units including, but not limited to, internal memory, the program module, the real-time clock, input-output circuitry, the modem, the display and keyboard. The program shall be capable of operating with an external monitor and controller keypad. Full documentation on the program shall be included. The software shall be configured to work on a 412C prom module.~~

~~**14.2.11.2.4 Prom Module.** Each Model 170E controller unit shall be furnished with one program module, Model 412C, including a back up lithium battery and real time clock adjuster circuit, one Dallas 1225 chip and two 6264 ram chips. The prom module shall be configured for BiTran software.~~

14.2.11.3.1 Type 20~~1~~70 Controller Cabinets. Controller cabinets shall be the model shown on the plans. Controller cabinets, including the auxiliary door(s), shall be cast aluminum or 0.125 inch reinforced sheet aluminum alloy and be of clean-cut design and appearance. The cabinets to be furnished shall be in accordance with the most current "Transportation Electrical Equipment Specifications (TEES)" and "Qualified Products List (QPL)" issued by the State of California, Business, Transportation & Housing Agency: Department of Transportation (Caltrans), and all revisions and addenda thereto current at the time the project is advertised, except as modified in

these specifications. ~~Exception to these standards is the "L" (low power) models.~~ In case of conflict, the City's specifications shall govern.

Bidders shall provide a certification that the equipment proposed is included on the most current "Qualified Products List (QPL)" of Caltrans. Exception: City specific equipment that is not defined in the Caltrans specification is exempt from this QPL requirement.

The additional requirements for the models 332L, 332D and 336~~S~~L ~~stretch~~ cabinet assemblies are as follows. All cabinets shall exhibit a "bare" aluminum finish. An auxiliary door equipped with a raintight gasket shall allow access to a police panel and shall be equipped with a lock whose key will not unlock the main door. Each cabinet door shall have a No. 2 Corbin cabinet lock and provisions for locking with a padlock. Two keys shall be furnished for each type of lock used. The doors shall be louvered to direct the incoming air downward. The cabinet shall be supplied with a replaceable furnace-type fiberglass filter mounted behind the louvers and shall cover the vent openings. A filter shell shall be provided to fit over the filter to provide mechanical support. The handles for each door shall swing outward. The 336~~S~~L ~~stretch~~ cabinet shall be provided with an M base adapter. All cabinets shall be supplied with anchor bolts.

Each 332L cabinet shall include two (2) fluorescent lighting fixtures mounted inside the front and back portion of the cabinet. Model 332D cabinets shall have four (4) fluorescent lighting fixtures. Model 336~~S~~L cabinets will require only one (1) fluorescent lighting fixture. These fixtures shall include a cool white lamp with protective cover and shall operate by a normal power UL listed ballast. The fixtures shall be installed to automatically power on when the cabinet door is opened and automatically power off when the cabinet door is closed. A manual on/off switch shall be provided for each fixture. Each switch should work each individual light.

14.2.11.4.1 Cabinet Components.

14.2.11.4.2 Pull Out Drawer. ~~The~~All cabinet types shall contain a pull out, hinged-top drawer, including sliding tracks, with lockout and a quick-disconnect feature, such as a Vent-Rak Retractable Writing Shelf, #D-4090-13, or equivalent. The pull out drawer shall extend a minimum of 14 inches to facilitate removal of the processor by providing an aluminum platform covered with a formica-type, chemical-proof plastic sheet while the rear connector is being removed. The interior of the drawer shall be accessible by lifting the hinged platform. Minimum interior dimensions of the drawer shall be one inch high, 13 inches deep and 16 inches wide. The drawer shall be capable of supporting 40 pounds when fully extended and shall be mounted immediately below the controller assembly.

14.2.11.4.3 ~~Power Distribution~~Service Panel Assembly. All cabinet assemblies shall be supplied with a ~~power distribution~~service panel assembly Number 2L, (PDA#2L) with a solid state relay. The ~~power distribution~~service panel assembly shall not contain a mercury contactor. If the solid state relay fails to open during either maintenance flash or a cabinet monitor unit fault condition, the cabinet must interrupt the 24 VDC control to the load switches. If an auxiliary output file is specified, C5 connections shall be included. The SPA shall contain a model 206L power supply (switching type) that is high efficiency and power factor corrected. A plug-able line voltage transient suppressor must be included to provide clean power.

series parallel device, and shall be an SHA 12~~1~~50-TEES. ~~The device shall include the following features and functions:~~

~~A. Maximum A.C. line voltage shall be 140V during 20 pulses of peak current, each of which shall rise in 8 microseconds and fall in 20 microseconds to one half of the peak of 20,000 amps.~~

~~B. The protector shall be provided with the following terminals:~~

~~1. Main line (A.C. line first stage terminal).~~
~~2. Main neutral (A.C. neutral input terminal).~~
~~3. Equipment line out (A.C. line second stage output terminal,10 amps.).~~
~~4. Equipment neutral out (neutral terminal to protected equipment).~~
~~5. GND (earth connection).~~

~~C. The main A.C. line in and the equipment line out terminals shall be separated by a minimum 200 microhenry inductor rated to handle 10A A.C. service. The first stage clamp shall be between the main line and ground terminals.~~

~~D. The second stage clamp shall be between the equipment line out and equipment neutral.~~

~~E. The protector for the first and second stage clamp shall have an MOV or similar solid state device rated at 20KA and shall be of a completely solid stage design. Gas discharge tubes will not be allowed.~~

~~F. The main neutral and equipment neutral out shall be connected internally and shall have an MOV similar solid state device or gas discharge tubes rated at 20KA between the main neutral and ground terminals.~~

~~G. Peak clamp voltage shall be 350V at 20KA measured between the equipment line out and equipment neutral out terminals. Current shall be applied between the main line and ground terminals. Ground and main neutral terminals shall be externally tied together. The voltage shall not exceed 350V.~~

~~H. The protector shall be epoxy-encapsulated in a flame retardant material.~~

~~I. Continuous service current shall be 10 amps at 120V alternating current root mean squared (RMS).~~

~~J.~~A. ~~The equipment line out shall provide power to the Type 170E controller and to the 24 volt power supply.~~

~~**14.2.11.5.2 Communications Line Protector.** Communications line protector for incoming and outgoing communication lines shall be EDCO part #PC642C-008 or equivalent with mounting connector #PCB1B or equivalent.~~

14.2.11.6 Cabinet Accessories. Each cabinet shall be equipped with the following, unless specified otherwise:

Model 222 Loop Detector Amplifiers. The loop detector amplifier units shall be as specified in the Caltrans Specifications. A quantity of 8 units shall be provided per cabinet.

Model 242 D.C. Isolator. The D.C. isolators shall be the Model 242 as specified in the Caltrans Specifications. A quantity of 3 units shall be provided per cabinet.

Model 200 Load Switch. The load switch shall be the Model 200 as specified in the Caltrans Specifications. A quantity of 16 units shall be provided per cabinet.

Model 204 Flasher. The flashers shall be the Model 204 as specified in the Caltrans Specifications. Each cabinet shall be supplied with two (2) model 204 flashers.

Model 252 A.C. Isolator. The A.C. isolators shall be the Model 252 as specified in the Caltrans Specifications. The quantity of units shall be as described on the plans.

Model 430 Flash Transfer Relay. The flash transfer unit shall be the Model 430 as specified in the Caltrans Specifications. Each cabinet shall be supplied with four (4) model 430 flash transfer relays. Two (2) additional model 430 flash transfer relays shall be provided when a 420 auxiliary is shown on plans.

~~Model 400 Modem. A quantity of 1 unit shall be provided.~~

~~Model SM 2400 Modem. The quantity of units shall be as described on the plans.~~

~~Computer Cable. The computer cable shall consist of both male and female amp connectors. The female connector shall be located in the front of the cabinet and shall extend past the front edge of the rack a minimum of 0.5 inches and a maximum of 1 inch. The male connector shall be located in the back of the cabinet. The cable shall extend 14 inches along the side of the rack with a minimum of 12 inches free that can be used to plug into any of the controller's four ports. The cable shall consist of one wire connecting the like pin in the other connector starting with A and ending with R. The wire shall be 20 AWG. One cable shall be supplied for each cabinet. The mounting of this cable shall not interfere in any way with the installation or removal of the controller. If the cable is mounted within the pull out drawer, any hole that is drilled in the drawer shall be equipped with a rubber grommet to protect the cable and the cable shall have enough slack to prevent binding.~~

14.2.11.7 Model 2010 Conflict Monitor. Each cabinet shall be supplied with a Model 2010 ECLip conflict monitor. The conflict monitor shall be external to the controller circuitry in accordance with the Caltrans specifications. The monitor shall cause immediate transfer to flashing operation when conflicting or absent indications occur or when a voltage fault occurs. When the conflict monitor actuates flashing operation, the controller shall freeze or stop timing in the condition causing the actuation until manually reset. A single lamp failure in any signal head shall not cause the monitor to actuate.

A connector and terminal assembly designated as P20 (Magnum P/N 722120 or equivalent), for monitoring the absence of red shall be an integral part of the output file. The connector shall terminate and shall be compatible with the cable and connector of the conflict monitor unit. The pin assignments of the P20 connector and terminal assembly shall be provided with the cabinet plans. The P20 connector shall be designed such that the cable may only be inserted into the P20 connector in one direction. Unused red channels shall be programmed through jumpers. These jumpers shall cause 115V A.C. to be applied to any and all unused red monitoring channels. These jumpers and the respective attachment points shall be part of the output file.

~~**14.2.11.8 Software.** The 412C prom module shall be configured for Bi-Tran software that will be provided by the City.~~

14.2.11.~~9~~8.1 Testing Requirements. All equipment shall be tested for conformance to these specifications. Testing may be done by an independent laboratory if the manufacturer does not have sufficient facilities to conduct the testing. A copy of the test results for all equipment shall be supplied by the manufacturer to the Engineer.

14.2.11.~~9~~8.2 Conflict Monitor Test Cable. To facilitate testing of the conflict monitor, one additional 4-foot (1.2 m) connector cable shall be furnished by the manufacturer and installed in each cabinet. The cable shall utilize an 18 AWG (1.0 mm) wire to connect a 36-pin plug to the back panel terminals as specified below. The connector cable shall utilize a 36-circuit polarized nylon Waldon Molex type receptacle, P/N 03-06-1361, using a 0.062-inch (1.57 mm) female terminals made of 70/30 spring tempered 0.010 inch (0.254 mm) thick tin-plated brass with contact of resistance 0.0025 ohm millivolts, drop of 2.5 millivolts at one amp with 250 volts, 4 amps maximum per circuit. This connector cable shall "free float" in the bottom front 6 inches (150 mm) of the cabinet and shall not be used in the normal operation of the controller. A moisture-proof cap shall be provided to prevent the accumulation of moisture on the plug terminals. The cap shall remain attached to the connector when the cable is in use.

Receptacle Circuit	**Terminal Phase**	**Receptacle Circuit**	**Terminal Phase**
1	1 G	19	4 WALK
2	1 Y	20	8 WALK
3	2 G	21	1 AUX G[a]
4	2 Y	22	1 AUX Y[a]
5	3 G	23	3 AUX G[a]
6	3 Y	24	3 AUX Y[a]
7	4 G	25	5 AUX G[a]
8	4 Y	26	5 AUX Y[a]
9	5 G	27	6 AUX G[a]
10	5 Y	28	6 AUX Y[a]
11	6 G	29	I14-W STOP TIME
12	6 Y	30	DC GROUND

13	7 G	31	MONITOR RESET
14	7 Y	32	DC GROUND
15	8 G	33	2 AUX G[a]
16	8 Y	34	2 AUX Y[a]
17	2 WALK	35	4 AUX G[a]
18	6 WALK	36	4 AUX Y[a]

[a] Circuits used only in a 332A cabinet with an auxiliary output file

14.2.11.8~~9~~.3.1 Controller Testing. Each Model 2070~~170E~~ ATC controller unit shall be tested over a temperature range of -29 to 165 F (-34 to 74 C). Proper operation of the unit shall be verified at both temperature extremes and at ambient temperature. Testing shall be conducted prior to final inspection, and will not constitute a substitute for any quality control testing or final inspection testing normally performed.

14.2.11.8~~9~~.3.2 The environmental chamber(s) shall have provisions for remotely operating the Model 2070~~170E~~ ATC controller under test. Front panel displays shall be visible from a window in the environmental chamber. Signal outputs shall be brought out of the chamber to a display board if controllers cannot be directly observed. Cold and hot soak times shall be sufficient to allow all components in the device to reach the specified temperatures. A minimum soak time of three hours shall be used for all testing.

14.2.11.8~~9~~.3.3 The manufacturer shall submit to the Engineer a proposed testing procedure and schedule 30 days prior to testing for evaluation. Test procedures, environmental chambers, automatic test equipment, display boards, power supplies and controls shall be described in detail.

14.2.11.8~~9~~.3.4 The controller shall pass the following test at least five times at each temperature extreme and ambient:

A. Recovery from a short power interruption of approximately 500 milliseconds.
B. Recovery from a long power interruption of approximately 5 seconds.

14.2.11.8~~9~~.3.5 The vendor shall provide a method of testing controller inputs and outputs. Diagnostic software and wraparound connector for controller harnesses may be used. If diagnostic software is not used, outputs shall be brought out to a display board. Inputs may be paralleled to each controller.

14.2.11.8~~9~~.4 Cabinet Testing. Cabinets shall be tested at ambient conditions only. An automatic or semi-automatic method of checking cabinet wiring between equipment harnesses and field connections will be required.

14.2.11.8~~9~~.5 The Engineer reserves the right to relieve any or all testing requirements if certain specifications are met.

14.2.12 Concrete for Bases. Concrete shall be Portland Cement Concrete in accordance with Chapter 6 of the General Conditions and Technical Specifications. ~~be air-entrained Class B in~~

~~accordance with MoDOT Standard Specifications.~~ Reinforcing steel for concrete bases shall be in accordance with AASHTO M 42 or AASHTO M 53. Anchor bolts for posts and mast arms and controllers shall be as shown on the manufacturer's approved shop drawings.

~~**14.2.13.1. Wireless Telemetry Interconnect System.** This work shall consist of furnishing, installing and testing a complete wireless interconnect system comprised of intersections shown on the plans. The wireless interconnect system shall include all equipment listed or shown on the plans and shall include any incidental items necessary for the satisfactory operation of the system. Telemetry radios and antennas shall be installed and set up in accordance with the plans, these specifications, and the manufacturer's recommendations for a fully functioning system.~~

~~**14.2.13.2 Antenna System.** Antennas shall be positioned to receive maximum signal strength by adjusting the antenna direction while monitoring signal strength through the telemetry radio. Antenna mounts shall be securely fastened to the poles as shown on the plans. Antenna cable shall be installed inside metal poles and conduit as shown on the plans. External cable on poles shall not exceed 3 feet, unless approved by the Engineer. Approved external cable runs exceeding 3 feet shall be secured using manufacturer specified hangers at a maximum spacing of 3 feet. Cable terminations shall be made in accordance with the manufacturer's recommendations. Connectors shall be installed after cable has been pulled into place. Connectors outside of cabinets shall be sealed in accordance with the manufacturer's recommendations. Any holes made in metal poles shall be deburred and protected with grommets. Drip loops shall be provided between the antenna connector and the metal pole entrance or first pole clamp. Cable bends shall be in accordance with the manufacturer's specified bending radius. Antenna cable shall be continuous without splice between the antenna and the antenna surge protector in the controller cabinet.~~

~~**14.2.13.3 Grounding.** A separate ground rod shall be installed for each pole with an antenna. The ground rod shall be as shown on the plans and shall be installed in a pull box adjacent to the pole, where available. Ground wires shall be No. 2 AWG minimum, and shall be securely attached to the ground rod with grounding clamps as shown in *Standard Drawing TS-11: Grounding and Bonding*. The ground wire shall be attached to the ground lug in metal poles. For wood pole mounting, the ground wire shall be attached directly to the antenna mount and securely fastened to the pole with wire clamps at 3 feet maximum spacing. Copper compression lugs shall be used to attach the ground wire to ground lugs in poles or on antenna mounts.~~

14.3 INSTALLATION

14.3.1.1 Pull Boxes. Pull boxes shall be installed at locations as shown on the plans. Pull box size and type shall be as shown on the plans. The top surface of all pull boxes shall be flush with surfaced areas and approximately one inch above earth or sodded areas. A stone drain consisting of ½ inch to ¾ inch clean limestone 18 inches deep shall be constructed under each pull box.

14.3.1.2 Conduit shall enter the pull box in the side of the box a minimum of 18 inches deep and at least 4 inches above the bottom of the box. Conduit shall extend into the box a minimum of 2 inches and a maximum of 4 inches. ~~The minimum wall height for pull boxes shall be 28 inches.~~

16 TEMPORARY EROSION AND SEDIMENT CONTROL

~~**16.1 Purpose.** The purpose of temporary sediment and erosion control is to prevent sediment from leaving the construction site. The contractor is required to follow and abide by all local, state, and federal rules and regulations regarding the discharge of pollutants.~~

~~**16.2 Indemnity.** The contractor shall indemnify and hold the City harmless for any penalties, fines, fees or costs, including costs of defense, which are charged or assessed by any Federal, state or local agency including, but not limited to, Environmental Protection Agency or Department of Natural Resources~~

~~**16.3 Payment.** Payment for EROSION AND SEDIMENT CONTROL will be on a lump sum basis prorated over the construction period when control measures are adequately maintained.~~

~~Upon failure of the Contractor to comply with any order of the Engineer to correct a deficiency in Sediment and Erosion Control, the Engineer shall have the authority to cause said conditions to be corrected and to deduct the cost from any payment due or to become due to the Contractor.~~

~~It will be the contractors responsibly to remove any sediment accumulation that could cause a BMP to become ineffective and make any and all repairs necessary after each ½" rainfall event.~~

~~**16.4 Inspection.** After the Initial BMP Inspection by the City, the site will be periodically inspected by the City and the erosion and sediment control plan and measures will be reviewed for compliance based on the following criteria as determined by City Staff:~~

- ~~**A.** Weekly and Post Rainfall BMP inspections are documented and recorded in the SWPPP including any updates to the site plan~~
- ~~**B.** Erosion and Sediment control measures are in place according to the SWPPP~~
- ~~**C.** Erosion and sediment control devices have been adequately maintained and sediment has been kept on site.~~

~~**16.5 Progressive Enforcement.** Periodic inspections of the SWPPP and BMP's will be made. If, at any time, the Contractor is found to be in violation of these requirements the following Progressive Enforcement Policy will be implemented:~~

1. ~~**Verbal Notification:** If non-compliance status is found at the site then, except in extremely egregious situations, a verbal notification shall be issued to the contractor. For the more extreme issues of non-compliance a time frame may be issued in order for the contractor to fix the issue and be ready for a re-inspection. For more minor issues of non-compliance the site may not require a re-inspection. If a re-inspection is warranted and the site still does not meet the standards for compliance then proceed to the next step.~~

~~**16.8.11 Disposal of Off-Site Material.** Prior to removal of excavated or dredged material from the project site, Contractor shall provide the City with a copy of the Land Disturbance Permit, or other applicable permit obtained from the governing entity, pertaining to the site where material will be deposited. If a permit is not required at the fill site, Contractor must provide a statement to this effect. This information will be attached as an addendum to the SWPPP for this project. **No material may be removed from the project site without the required documentation.**~~

16.1 Applicability. This Chapter applies to work being performed under contract to the City of Springfield (City). Public improvements on private developments shall comply with City Code Chapter 96 Article III Land Disturbance Activity.

16.2 Scope of Work. The work shall consist of furnishing all materials, equipment, and labor necessary to adhere to, install, and maintain best management practices (BMPs) as specified in the SWPPP or project plans or as directed by the Engineer or Inspector, and to complete and adhere to the requirements and conditions described herein. The Contractor is required to follow and abide by all applicable local, state, and federal rules and regulations.

16.3 Purpose. The purpose of erosion and sediment control is to protect water quality by minimizing the amount of sediment and other pollutants leaving the construction site as required by federal, state, and local regulations.

16.4 Definitions.

16.4.1 Best Management Practices (BMPs). BMPs are structural or non-structural practices that prevent or minimize erosion and the discharge of sediment and other pollutants from the construction site. Examples of structural BMPs include silt fence and erosion control blanket. Examples of non-structural BMPs include sequencing (also referred to as scheduling or phasing) to reduce the amount and duration of soil exposure, and sweeping of streets.

16.4.2 Designated Responsible Person (DRP). The DRP is the person designated by the Contractor to be responsible for day-to-day operation and maintenance of BMPs. The DRP shall have a thorough and demonstrable knowledge of the SWPPP and erosion and sediment control practices in general.

16.4.3 Stormwater Pollution Prevention Plan (SWPPP). A SWPPP is a site-specific written document, including a site plan and narrative, identifying and describing the BMPs for the site. The SWPPP format and required components shall follow the City's SWPPP template.

16.5 Materials. BMP selection, design, installation, and maintenance shall adhere to the City's Erosion and Sediment Control Guidelines, or as approved by the Engineer.

16.6 Requirements and Conditions for Projects Disturbing 1 acre or Greater. A City land disturbance permit is required for projects disturbing 1 acre or greater. The Contractor shall complete and adhere to the following requirements for projects disturbing 1 acre or greater.

16.6.1 SWPPP Compliance. The Contractor shall be responsible for complying with the SWPPP provided and approved by the City for the project. The Contractor shall be responsible for providing information requested by the Engineer or Inspector for inclusion in the SWPPP, including but not limited to the following:

16.6.1.1 Designated Responsible Person. The Contractor shall designate a DRP in the SWPPP.

16.6.1.2 Project Sequencing. The Contractor shall work with the Engineer and Inspector to establish and describe a sequencing plan as required in the SWPPP to minimize the extent and duration of soil exposure and minimize the discharge of sediment and other pollutants from the site.

16.6.1.3 Disposal of Material Off-Site. The Contractor shall specify the location of off-site fill areas. If the off-site fill areas do not meet the conditions for permit coverage under the land disturbance permit for the project, the Contractor shall provide documentation that off-site fill areas are covered by another land disturbance permit or are less than 1 acre.

16.6.2 Pre-Construction Requirements. The Contractor shall complete and adhere to the following requirements prior to disturbing any site vegetation or earth.

16.6.2.1 Pre-Construction Meeting. The Contractor is required to schedule and participate in a pre-construction meeting with the Stormwater Quality Division of the Department of Environmental Services in order to review and discuss the SWPPP and associated requirements.

16.6.2.2 Initial BMP Inspection. The Contractor shall schedule an initial BMP inspection with the Stormwater Quality Division of the Department of Environmental Services prior to disturbance of any site vegetation or earth, except as needed to install BMPs. The requirements of the initial BMP inspection are as follows.

16.6.2.2.1 Installation of BMPs. The Contractor shall install the BMPs as shown and described in the SWPPP for the first phase of construction as described in the SWPPP sequencing plan.

16.6.2.2.2 Public Notification Sign. The Contractor shall post a public notification sign provided by the City, which displays the land disturbance permit number and contact information, at a location visible to the public.

16.6.2.2.3 SWPPP Storage. The Contractor shall provide a secure location protected from the weather for storing the SWPPP onsite.

16.6.2.3 Issuance of Land Disturbance Permit. Upon satisfactory completion of a pre-construction meeting and initial BMP inspection, the City will issue a land disturbance permit for the project. No disturbance of site vegetation or earth shall occur, except as necessary for installation of BMPs, until a land disturbance permit has been issued.

16.6.3 Requirements and Conditions During Construction. The Contractor shall complete and adhere to the following requirements during construction.

16.6.3.1 SWPPP Storage. The Contractor shall ensure that the current copy of the SWPPP is stored in the designated location on-site.

16.6.3.2 Notification to Subcontractors. The Contractor shall notify each subcontractor performing work at the site, including utility crews, of the existence of the SWPPP and what actions or precautions shall be taken while on-site to minimize the potential for erosion, damaging of BMPs, and discharge of sediment or other pollutants from the site. The Contractor shall identify in the SWPPP each subcontractor engaged in activities at the site that could impact stormwater, and each subcontractor shall sign a Subcontractor Certification which shall be attached to the SWPPP.

16.6.3.3 BMP Implementation and Maintenance. The Contractor shall be responsible for implementing and adhering to non-structural BMPs described in the SWPPP throughout construction. The Contractor shall be responsible for ensuring that structural BMPs are installed and maintained as described in the SWPPP throughout construction. Maintenance includes but is not limited to removal of sediment as needed for BMP effectiveness, and replacement of BMPs whose functionality has become compromised with equal BMPs.

16.6.3.4 Sequencing and Stabilization. The Contractor shall be responsible for implementing and adhering to the sequencing plan described in the SWPPP and for temporary and permanent stabilization of disturbed areas. Seeding and sodding shall adhere to Chapter 13 of the General Conditions and Technical Specifications.

16.6.3.4.1 Temporary Stabilization. Temporary stabilization consisting of vegetation or other BMPs including but not limited to check dams, silt fences, or mulch, is required where soil disturbing activities will cease on any portion of the site and are not planned to resume for a period exceeding 14 calendar days. Temporary stabilization must be initiated immediately upon knowing the duration is more than 14 days, and must be completed within 7 calendar days. If the slope of the area is greater than 3:1 (3 feet horizontal to one foot vertical) or if the slope is greater than 3% and greater than 150 feet in length, then the Contractor shall establish temporary stabilization within 7 days of ceasing operations on that part of the site. Allowances to the 7 day completion period may be made due to weather and equipment malfunctions. The use of allowances shall be documented in the SWPPP. The requirement to immediately initiate stabilization is further defined in the SWPPP. The Contractor shall be responsible for maintaining and re-establishing temporary stabilization as needed.

16.6.3.4.2 Final Stabilization. Final stabilization of disturbed areas must be initiated immediately and completed with 7 calendar days whenever any clearing, grading, excavating or other earth disturbing activities have permanently ceased on any portion of the site. Allowances to the 7 day completion period may be made due to weather and equipment malfunctions. The use of allowances shall be documented in the SWPPP. The requirement to immediately initiate stabilization is further defined in the SWPPP.

16.6.3.5 Pavement Cleaning. The Contractor shall clean paved surfaces, including but not limited to streets and sidewalks, as needed or as directed by the Engineer or Inspector to minimize dust and the discharge of sediment and other pollutants from the site and to clean up sediment tracked or discharged from the site.

16.6.3.6 Non-Sediment Pollution Control. The Contractor shall follow good housekeeping and pollution prevention measures as described in the City's Erosion and Sediment Control Guidelines and in the SWPPP, including but not limited to collection and disposal of trash and construction debris, proper handling and storage of concrete wash-out, chemicals and hazardous materials, cleanup of spills or leaks, and providing and maintaining adequate temporary toilet facilities as needed.

16.6.3.7 Inspections. The City's Inspector will conduct erosion and sediment control inspections weekly and after rain events that generate runoff onsite. The Contractor shall correct any deficiencies noted by the Inspector within the timeframe specified by the Inspector, not to exceed 7 calendar days unless documented weather conditions prevent correction.

16.6.4 Requirements and Conditions Upon Completion of Construction. The Contractor shall complete and adhere to the following requirements upon completion of construction.

16.6.4.1 Removal of Temporary BMPs. Upon satisfactory inspection by the Inspector of final stabilization on any portion of the site throughout the life of the project, the Contractor shall remove temporary BMPs. Temporary BMPs shall not be removed prior to satisfactory final stabilization.

16.6.4.2 Permit Termination. The Contractor shall be responsible for contacting the Stormwater Quality Division of the Department of Environmental Services to schedule an inspection to terminate the City land disturbance permit. The permit can be terminated when perennial vegetation, pavement, buildings, or structures using permanent materials cover all areas that have been disturbed. With respect to areas that have been vegetated, vegetation cover shall be at least 70% plant density over 100% of the site. Permit termination also requires removal of temporary BMPs and any accumulated sediment or debris in the stormwater system or waterway. Final payment will not be made until the permit is terminated.

16.6.4.3 Return of SWPPP. Final payment will not be made until the Contractor has returned the SWPPP to the City.

16.7 Requirements and Conditions for Projects Disturbing Less Than 1 Acre. The Contractor shall complete the following requirements for projects disturbing less than 1 acre. A City land disturbance permit and SWPPP are not required.

16.7.1 BMP Implementation and Maintenance. The Contractor shall be responsible for implementing and adhering to any non-structural BMPs described on the project plans throughout construction. The Contractor shall be responsible for ensuring that any structural

BMPs shown on the project plans are installed and maintained throughout construction. Maintenance includes but is not limited to removal of sediment as needed for BMP effectiveness, and replacement of BMPs whose functionality has become compromised with equal BMPs.

16.7.2 Disposal of Material Off-Site. Prior to removal of excavated or dredged material from the project site, the Contractor shall specify the location of off-site fill areas. Off-site fill areas shall be permitted by a state land disturbance permit and any applicable local land disturbance permit, or shall be less than 1 acre.

16.7.3 Pavement Cleaning. The Contractor shall clean paved surfaces, including but not limited to streets and sidewalks, as needed or as directed by the Engineer or Inspector to minimize dust and the discharge of sediment and other pollutants from the site and to clean up sediment tracked or discharged from the site.

16.7.4 Non-Sediment Pollution Control. The Contractor shall follow good housekeeping and pollution prevention measures as described in the City's Erosion and Sediment Control Guidelines, including but not limited to collection and disposal of trash and construction debris, proper handling and storage of chemicals and hazardous materials, cleanup of spills or leaks, and providing and maintaining adequate temporary toilet facilities as needed.

16.7.5 Stabilization. The Contractor shall be responsible for stabilization of disturbed areas. Seeding and sodding shall adhere to Chapter 13 of the General Conditions and Technical Specifications.

16.7.6 Removal of Temporary BMPs. Upon completion and satisfactory inspection of final stabilization by the Inspector, the Contractor shall remove temporary BMPs.

16.7.7 Inspections. The City's Inspector may conduct periodic erosion and sediment control inspections on projects disturbing less than 1 acre. The Contractor shall correct any deficiencies noted by the Inspector within the timeframe specified by the Inspector.

16.8 Indemnity. The Contractor shall indemnify and hold the City harmless for any penalties, fines, fees or costs, including costs of defense, which are charged or assessed by any federal, state or local agency including, but not limited to, the United States Environmental Protection Agency or the Missouri Department of Natural Resources.

16.9 Payment. Payment for EROSION AND SEDIMENT CONTROL will be on a lump sum basis prorated over the construction period when control measures are adequately maintained. Upon failure of the Contractor to comply with any order of the Engineer to correct a deficiency in Erosion and Sediment Control, the Engineer shall have the authority to cause said conditions to be corrected and to deduct the cost from any payment due or to become due to the Contractor.

16.10 Progressive Enforcement. If, at any time, the Contractor is found to be in violation of the requirements herein, the following Progressive Enforcement Policy will be followed.

16.10.1 Verbal or Written Notification. A verbal or written notification shall be issued to the Contractor. The Contractor shall correct the deficiency noted within the timeframe given by the Inspector or Engineer.

16.10.2 Notice of Violation (NOV). Upon failure of the Contractor to comply with a verbal or written notification, in the event of an egregious violation (as determined by the City or other government agencies), or in the event of repeated violations of a similar nature, a Notice of Violation may be issued. The Contractor shall comply with the terms of the NOV.

16.10.3 Stop Work Order. In the event that the Contractor disturbs any vegetation or earth prior to issuance of a land disturbance permit for sites disturbing 1 acre or greater, except as needed for installation of BMPs, a Stop Work Order may be issued. A Stop Work Order may also be issued upon failure of the Contractor to comply with an NOV. The City shall have the right to make the necessary corrections and deduct the related costs from the amount to be paid to the Contractor. The Stop Work Order shall remain in effect until all deficiencies have been corrected.

16.10.4 Further Enforcement Actions. Further enforcement actions may be taken in accordance with the General Conditions and Technical Specifications and City Code.

16.11 Liquidated Damages. At the City's discretion, Liquidated Damages may be recovered and withheld for each NOV. The amount of Liquidated Damages to be recovered and withheld may be in the amount of $500.00 per NOV.

City of Springfield, Missouri

Design Standards for Public Improvements

Adopted:

Dan Smith
Director of Public Works

40. **Storm Water Detention Facility.** A drainage facility designed and constructed for the purpose of detaining ~~the peak rate of~~ storm water runoff to reduce downstream flows and/or reduce storm water pollutant levels. ~~from a specified rainstorm.~~

41. **Streets.** "Street" is a way for vehicular traffic, whether designated as a street, highway, thoroughfare, parkway, throughway, road, avenue, boulevard, lane, place, or however otherwise designated.

42. **Subgrade.** The surface of a street on which a base course or riding surface is to be placed.

43. **Subdivision.** The division of land into two (2) or more lots, tracts, or parcels for the purpose of transfer of ownership or building development, or, if a new street or easement of access is involved, any division of a parcel of land. The term includes resubdivision and, when appropriate to the context, shall relate to the process of subdividing or to the land subdivided.

44. **Surveying.** The act of determining the positions of points on the earth's surface by means of measurement of distance, direction, and elevation.

45. **Tendering**. The legal transfer of ownership and maintenance responsibility of a public improvement to the City of Springfield.

46. **Unimproved Street.** A street not having concrete curbs, or curbs and gutters, or other such equivalent physical features which serve to establish a permanent street grade.

47. **Vehicle.** Every device in, upon, or by which any person or property is, or may be transported, or drawn upon a street, except devices used exclusively upon stationary rails or tracks.

1.2 PUBLIC WORKS POLICIES

1.2.1 Minimum Standards for Design. The Director of Public Works must approve all plans for public improvements within the City of Springfield. This approval is a conceptual approval only and does not give detail approval to any particular design item or data shown on the plans, nor does it give approval for any deviation from City specifications unless that deviation is shown on the plans by a general note. The Engineer who sealed the plans is responsible for all lines and grades, field data, constructability of the design, and all other items affecting the project including compliance with the City specifications.

~~VARIANCE FROM MINIMUM STANDARDS.~~

~~ALL DESIGN REQUIREMENTS WILL BE STRICTLY ADHERED TO UNLESS WRITTEN JUSTIFICATION FOR A DESIGN VARIANCE IS PRESENTED TO AND APPROVED BY~~

~~THE ADMINISTRATIVE REVIEW COMMITTEE PRIOR TO PRELIMINARY PLAT APPROVAL.~~

~~SHOULD A REQUEST FOR A DESIGN VARIANCE OCCUR AFTER PRELIMINARY PLAT APPROVAL, AND THIS CAUSES NONCONFORMANCE WITH THE PRELIMINARY PLAT, THE PLANNING AND ZONING COMMISSION AND CITY COUNCIL WILL HAVE TO APPROVE THE AMENDMENT TO THE PRELIMINARY PLAT, AS THE AUTHORITY TO ACCOMPLISH THIS DOES NOT REST WITH THE ADMINISTRATIVE REVIEW COMMITTEE.~~

Variance from minimum standards

All design requirements will be strictly adhered to unless written justification for a design variance, sealed by a professional engineer is presented and approved. This justification should be submitted along with the preliminary plat and variance applications which will be reviewed by the Administrative Review Committee and approved by the Planning and Zoning Commission and City Council.

Should a request for a design variance occur after preliminary plat approval, the sealed justification for a design variance, variance application and any required amendment to the preliminary plat must be resubmitted to the Planning and Zoning Commission and City Council for approval. Substantial changes would require a new preliminary plat.

1.2.2 Acceptance of Public Improvements. No streets, alleys, sanitary sewers, storm sewers, or other public improvements will be accepted or approved by either the City Council or Director of Public Works, unless the improvements were constructed in accordance with Plans, Special Provisions, and Technical Specifications approved by the Director of Public Works.

1.2.3 Utility Location Policies

1.2.3.1 General. The following criteria has been established for the uniform treatment of the location or relocation of utility facilities within the right-of-way of the public street system in order to preserve the traffic-carrying capacity of the street and to minimize interference with normal maintenance operations. These requirements apply to all public and private utilities including power transmission, telephone, cable television, telegraph, water, gas, oil petroleum products, pipelines, and any other utility facilities (excluding Sanitary Sewers). The requirements apply to underground, surface, or overhead facilities located within or crossing street right-of-way. Exceptions to the requirements set forth will be considered when major utility extensions are proposed or when improvements by their size necessitate special consideration. All utilities installing any facilities in a public right-of-way must meet the requirements of the Department of Public Works and shall receive advance approval from Public Works prior to commencing construction on a public right-of-way. In order to receive approval, an engineering drawing detailing the installation shall be required. This engineering drawing shall depict adequate data to determine location and impact on other facilities located in the public right-of-way.

In the case of reconstruction or rehabilitation where location of existing utilities will not be relocated and where breaks or normal maintenance is needed, the requirement for an engineering drawing shall be waived.

1.2.3.1.2 Vertical Clearance for Overhead Crossings. The vertical clearance of new or existing overhead installations will not be less than the current minimum requirements of the National Electric Safety Code, but in no case less than 18 ft.

1.2.3.1.3 Minimum Cover for New Underground Utilities. The minimum cover for new underground utilities is:

- 42 in. for all water lines (parallel and crossings) that are 2" or less in diameter or rigidly encased
- 42 in. for fiber optic cable (crossings encased in rigid conduit)
- 72 in. for fiber optic cable (crossings encased in polyethylene (PE) pipe)
- 30 in. for direct burial and in trench fiber optic cable (parallel)
- 24 in. for all other direct burial cable (parallel)
- 72 in. for uncased polyethylene (PE) gas pipe crossings under ditches and roadways but 30 in. elsewhere
- 30 in. for all other (such as, but not limited to, gravity sewers, force sewers and electric) underground utilities (both parallel and crossing).

1.2.3.2 New Subdivisions – Residential. Parallel installations of overhead facilities within the street right-of-way are to be located within one (1) foot of the right-of-way line when proposed for construction on the same side of the street that sidewalks are constructed. Street lights and poles used to support transverse crossings of the right-of-way shall not be located closer than two (2) feet of the curb or edge of roadway or paved shoulder. Poles, guys, anchors, braces, and other appurtenances for overhead facilities shall not encroach into sidewalk or streets. Parallel installation of overhead facilities and underground facilities, including meters, valves, and other appurtenances, within the street right-of-way, are to be located within a seven (7) foot area adjacent to the right-of-way line where no sidewalks exist. In no case will the City allow the facility to be constructed within the street pavement area except for valves necessary for tapping existing facilities, nor will it be allowed to conflict with the street drainage. Careful consideration must be given to the location of valves, meter boxes, and other appurtenances, so that interference with the sidewalk and street curb is held to a minimum. Minimum cover for all underground facilities shall be 36 inches.

1.2.3.3 New Subdivisions – Nonresidential. Parallel overhead and underground facilities are to be located within seven (7) feet of the right-of-way line. Street lights and poles used to support transverse crossings of the right-of-way shall not be located closer than two (2) feet of the curb or edge of roadway or paved shoulder. Poles, guys, anchors, braces, and other appurtenances for overhead facilities shall not encroach into sidewalks or streets. Parallel installation of the underground facilities, including meters, valves, and other appurtenances, within the street right-of-way, are to be located within seven (7) feet of the right-of-way line. In no case will the City allow the facility to be constructed within the street pavement area except for valves necessary for tapping existing facilities, nor will it be allowed to conflict with the street drainage. Careful consideration must be given to the location of valves, meter boxes, and other appurtenances, so that interference with the sidewalk and curb is held to a minimum. Minimum cover shall be 36 inches or conforming to federal, state, or local agency requirements, whichever is greater.

No water line shall pass through or come into contact with any part of a sanitary sewer manhole.

5.2.6 Manholes.

5.2.6.1 Location. Manholes shall be installed at all changes in grade, size or alignment, at all intersections, and at intervals of not more than 500 feet for sewers 15 inches in diameter or less, and 600 feet for sewers 18" and larger in diameter.

5.2.6.2 Drop Type. A drop pipe shall be provided for a sewer entering a manhole at an elevation of 24" or more above the manhole invert. Where the difference in elevation between the incoming sewer and the manhole invert is less than 24 inches, the invert shall be filleted to prevent solids deposition; manholes, where the difference in elevation between the incoming sewer and the manhole invert is greater than 24 inches but less than 36 inches will not be allowed. Special design is required for connection to manholes with interior linings.

5.2.6.3 Diameter. The minimum diameter of manholes shall be 48 inches (4 feet), and shall conform to the latest revision of the City of Springfield Standard General Conditions and Technical Specifications. All inside drop manholes shall have a minimum diameter of 60 inches (5 feet).

5.2.6.4 Manhole Covers. All sanitary sewer manhole covers shall be Type "A," non-rocking, unless located within floodplain or prone to submersion. If located within floodplain or prone to submersion, use water-tight, hinged Pam-rex lid or EJ 24" ERGO no. EJ001040013L01 lid and frame or approved equal.

5.2.6.5 Stationing and Elevation. Stationing and elevations should be shown at all M.H. locations.

5.2.7 Lampholes. Lampholes may be permitted upon the approval of the Department of Public Works. Lampholes will be permitted only in cases where the slope of the land will not permit a future extension of the sewer beyond the proposed lamphole. The maximum length to the nearest manhole shall not be greater than 150 feet. Lampholes will not be permitted within street surfaces. Tees not to be located within 5' of the lamphole riser.

5.3 DRAWINGS AND DOCUMENTS TO BE SUBMITTED

5.3.1 Sewer Drawings. Sewer drawings shall be prepared on plans separate from other utilities. District, Section, and Public Works file numbers shall be obtained from the Department of Public Works.

5.3.1.1 Plan. The plan shall be at the top of the drawing. Standard symbols shall be used. A standard north arrow shall be located on each sheet (pointing up or to the right).

6 STORM SEWER AND DRAINAGE DESIGN

For Chapter 6 Strom Sewer and Drainage Design standards please reference the Stormwater Design Criteria Manual at the following link:

http://www.springfieldmo.gov/2120/Developer-Resources
~~http://www.springfieldmo.gov/stormwater/developer.html~~

7 STORMWATER DETENTION REQUIREMENTS FOR PUBLIC AND PRIVATE IMPROVEMENTS

For Chapter 7 Stormwater Detention Requirements for Public and Private Improvements standards please reference the Stormwater Design Criteria Manual at the following link:

http://www.springfieldmo.gov/2120/Developer-Resources
~~http://www.springfieldmo.gov/stormwater/developer.html~~

City of Springfield, Missouri

Standard Drawing Details for Public Improvements

Adopted:

Dan Smith _____
Director of Public Works

NEW

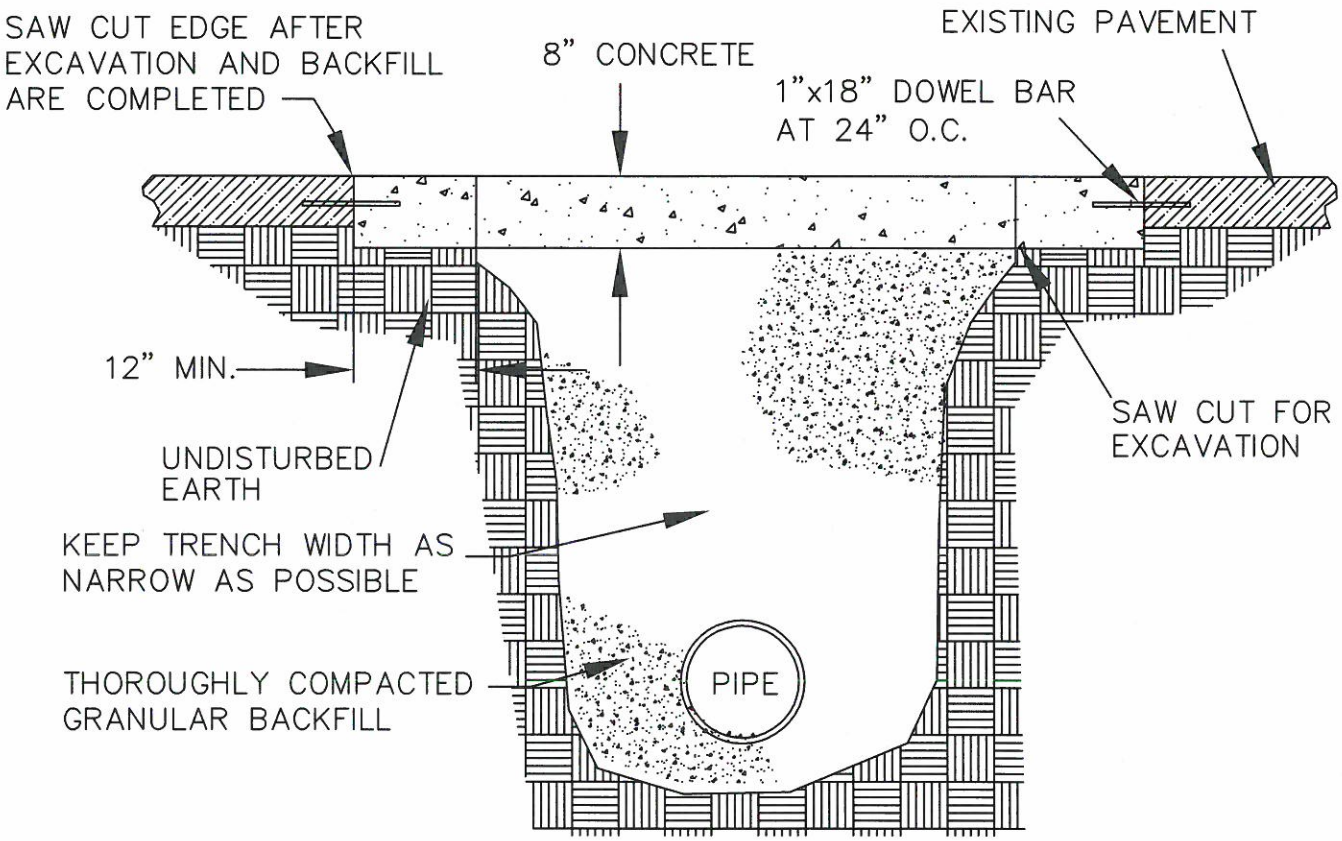

NOTES:

*OMIT DOWEL BARS WHEN REPAIRING ASPHALT PAVEMENT

*REPAIR SHALL CONFORM TO ALL CONSTRUCTION JOINT REQUIREMENTS

DEPARTMENT OF PUBLIC WORKS SPRINGFIELD, MO.	EXISTING PAVEMENT REPAIR DETAIL	1-1-2015 ST-13

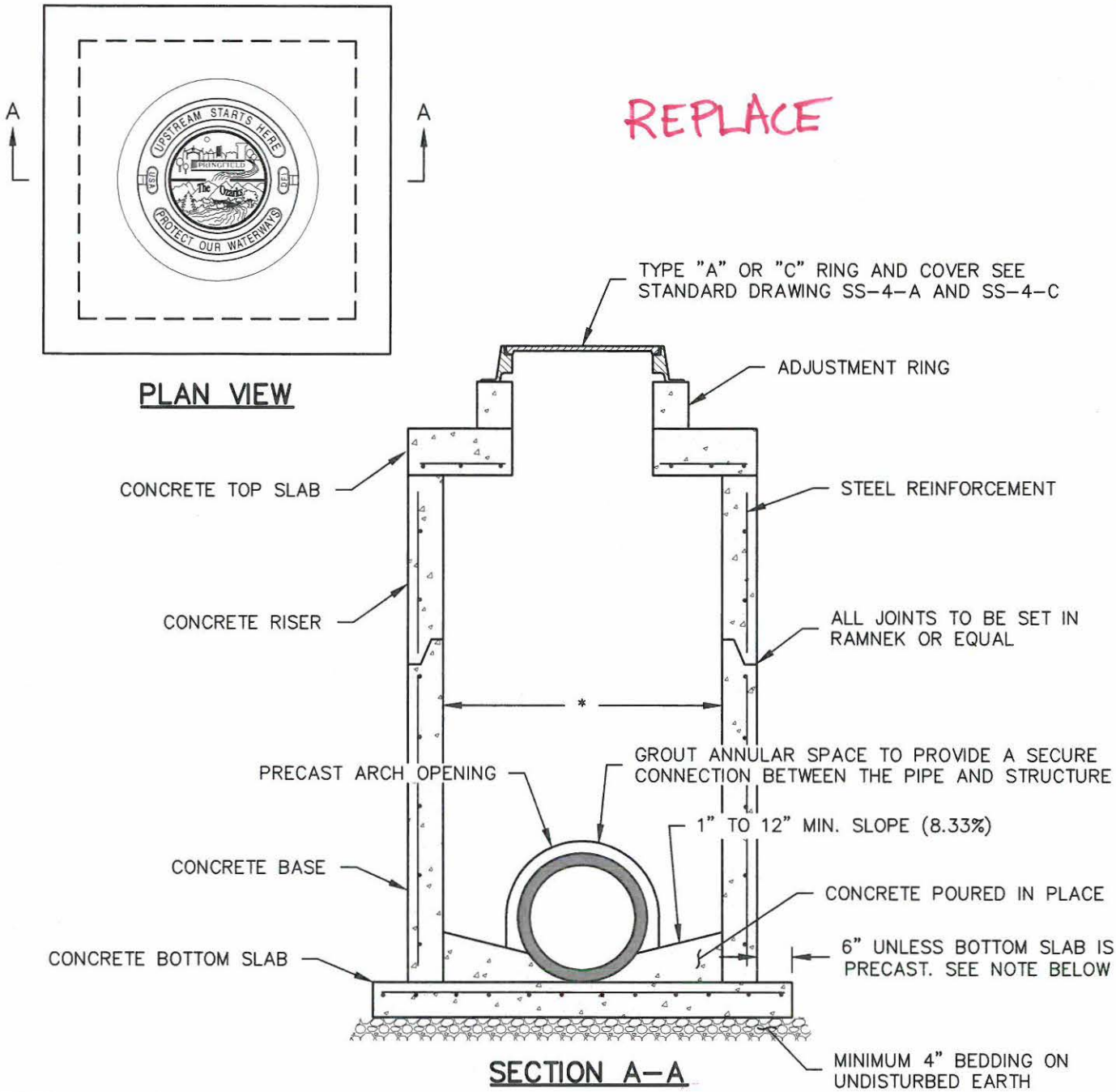

NOTES:

1. JUNCTION BOX SHALL BE DESIGNED AND MANUFACTURED IN ACCORDANCE WITH ASTM C 913.
2. CONCRETE TOP SLAB SHALL BE DESIGNED TO WITHSTAND LOADING BASED ON A COMBINATION OF DEAD LOADS, SNOW LOADS, AND A-16 (HS20-44) TRAFFIC LOADS IN ACCORDANCE WITH ASTM C890.
3. BOTTOM SLAB SHALL BE POURED IN PLACE. IF MANUFACTURER IS CONCERNED ABOUT STRUCTURAL INTEGRITY OF BASE DURING TRANSPORTATION THEN THE BOTTOM SLAB MAY BE PRECAST WITH RISER.
4. PIPE TO BE ON GRADE BEFORE BOTTOM SLAB IS CONSTRUCTED UNLESS BOTTOM IS PRECAST WITH BASE.
5. ALL PIPES SHALL FIT FLUSH WITH INSIDE FACE OF JUNCTION BOX.
6. BOTTOM OF JUNCTION BOX TO BE FILLED WITH CONCRETE FORMING CHANNELS TOWARD OUTLET PIPE FROM ALL INLET PIPES. CONCRETE SHALL BE FLUSH WITH INVERT OF OUTLET PIPE.
7. NO MORE THAN 2 ADJUSTMENT RINGS MAY BE USED BUT SHALL NOT EXCEED 18 INCHES.
8. CONCRETE TOP SLAB SHALL BE PINNED TO STRUCTURE AT THE CORNERS USING ONE #4 DEFORMED BAR IN EACH CORNER. BAR SHALL EXTEND A MINIMUM OF 6 INCHES INTO RISER BELOW.

PIPE DIAMETER	*MINIMUM INSIDE DIMENSION OF STRUCTURE
15" - 24"	THREE FEET (3')
27" - 30"	FOUR FEET (4')
36" - 42"	FIVE FEET (5')
48" - 54"	SIX FEET (6')

DEPARTMENT OF PUBLIC WORKS SPRINGFIELD, MO.	JUNCTION BOX	ADOPTED: 1-1-15 SS-1

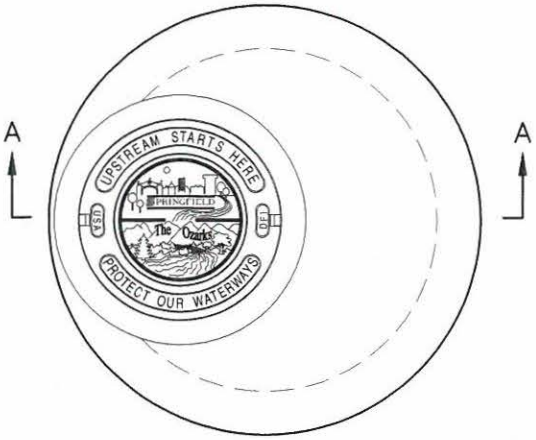

NEW

PLAN VIEW

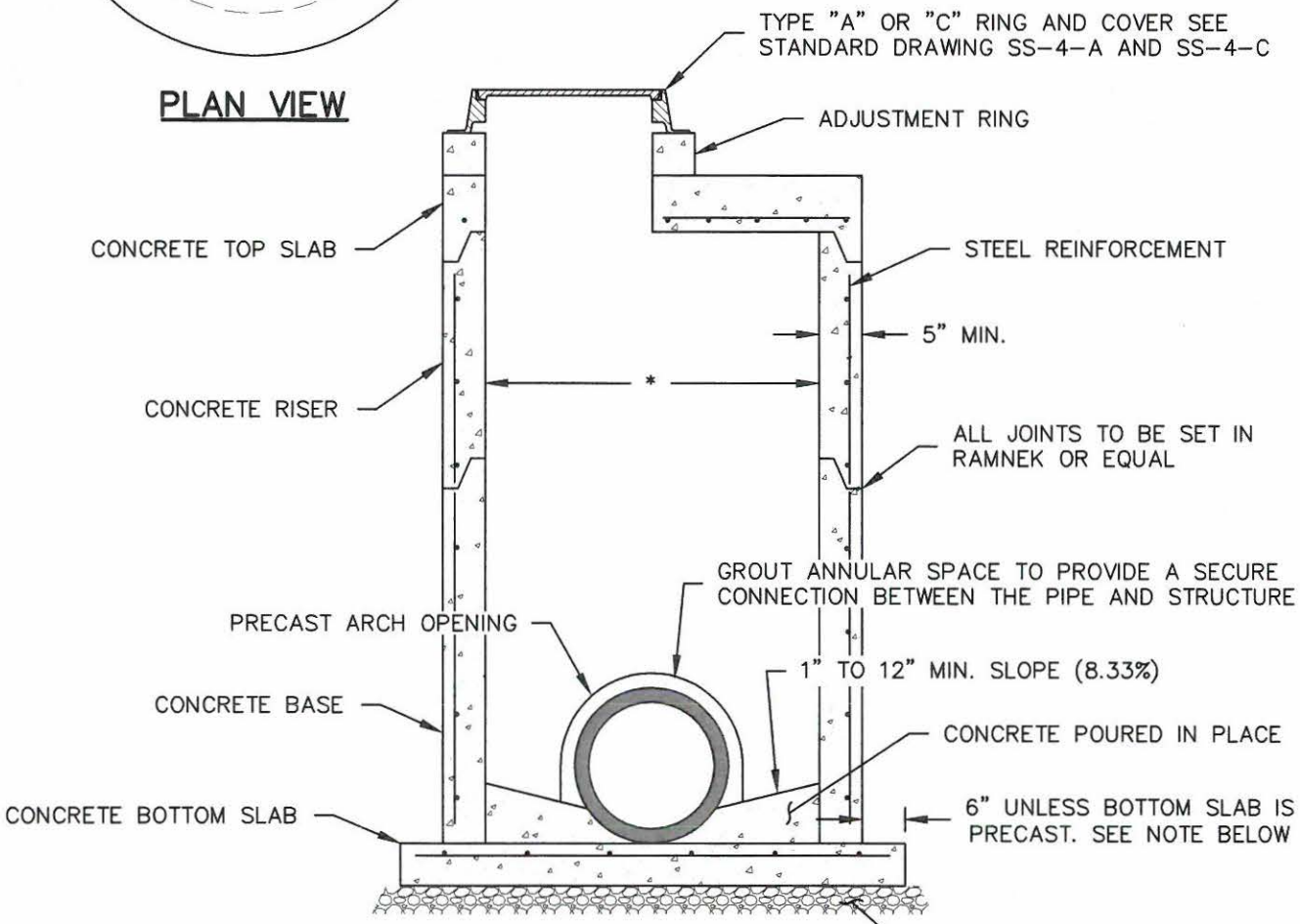

SECTION A–A

NOTES:

1. MANHOLE SHALL BE DESIGNED AND MANUFACTURED IN ACCORDANCE WITH ASTM C 478.
2. BOTTOM SLAB SHALL BE POURED IN PLACE. IF MANUFACTURER IS CONCERNED ABOUT STRUCTURAL INTEGRITY OF CONCRETE BASE DURING TRANSPORTATION THEN THE BOTTOM SLAB MAY BE PRECAST WITH CONCRETE BASE.
3. PIPE TO BE ON GRADE BEFORE BOTTOM SLAB IS CONSTRUCTED.
4. ALL PIPES SHALL FIT FLUSH AT SPRINGLINE WITH INSIDE FACE OF MANHOLE.
5. BOTTOM OF MANHOLE TO BE FILLED WITH CONCRETE FORMING CHANNELS TOWARD OUTLET PIPE FROM ALL INLET PIPES. CONCRETE SHALL BE FLUSH WITH INVERT OF OUTLET PIPE.
6. NO MORE THAN 2 ADJUSTMENT RINGS MAY BE USED AND SHALL NOT EXCEED 18 INCHES.
7. A MINIMUM CLEARANCE OF TWO FEET, MEASURED AT THE INSIDE FACE OF THE MANHOLE SHALL BE MAINTAINED BETWEEN THE OUTSIDE EDGE OF STORM SEWER PIPES..

PIPE DIAMETER	*MINIMUM INSIDE DIAMETER OF MANHOLE (SEE NOTE 7)
15" – 24"	FOUR FEET (4')
27" – 42"	FIVE FEET (5')
48"	SIX FEET (6')
54" – 66"	EIGHT FEET (8')

DEPARTMENT OF PUBLIC WORKS SPRINGFIELD, MO.	STORM SEWER MANHOLE	ADOPTED: 1–1–15 SS–2

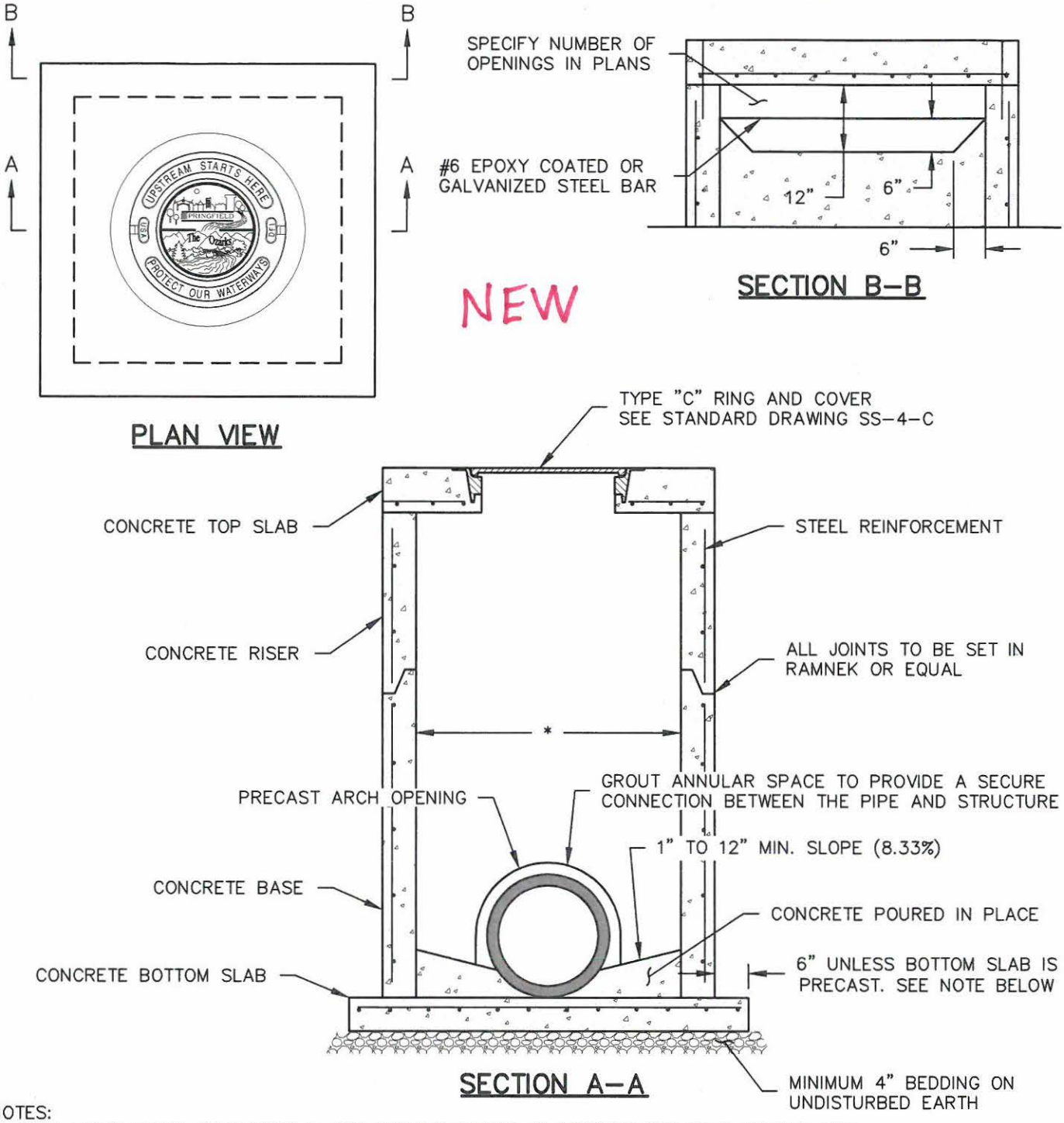

NOTES:

1. AREA INLET SHALL BE DESIGNED AND MANUFACTURED IN ACCORDANCE WITH ASTM C 913.
2. CONCRETE TOP SLAB SHALL BE DESIGNED TO WITHSTAND LOADING BASED ON A COMBINATION OF DEAD LOADS, SNOW LOADS, AND A–16 (HS20–44) TRAFFIC LOADS IN ACCORDANCE WITH ASTM C890.
3. BOTTOM SLAB SHALL BE POURED IN PLACE. IF MANUFACTURER IS CONCERNED ABOUT STRUCTURAL INTEGRITY OF CONCRETE BASE DURING TRANSPORTATION THEN THE BOTTOM SLAB MAY BE PRECAST WITH CONCRETE BASE.
4. PIPE TO BE ON GRADE BEFORE BOTTOM SLAB IS CONSTRUCTED UNLESS BOTTOM IS PRECAST WITH BASE.
5. ALL PIPES SHALL FIT FLUSH WITH INSIDE FACE OF INLET.
6. BOTTOM OF INLET TO BE FILLED WITH CONCRETE FORMING CHANNELS TOWARD OUTLET PIPE FROM ALL INLET PIPES. CONCRETE SHALL BE FLUSH WITH INVERT OF OUTLET PIPE.
7. CONCRETE TOP SLAB SHALL BE PINNED TO STRUCTURE AT THE CORNERS USING ONE #4 DEFORMED BAR IN EACH CORNER. BAR SHALL EXTEND A MINIMUM OF 6 INCHES INTO RISER BELOW.

PIPE DIAMETER	*MINIMUM INSIDE DIMENSION OF STRUCTURE
15" – 24"	THREE FEET (3')
27" – 30"	FOUR FEET (4')
36" – 42"	FIVE FEET (5')
48" – 54"	SIX FEET (6')

DEPARTMENT OF PUBLIC WORKS SPRINGFIELD, MO.	AREA INLET	ADOPTED: 1–1–15 SS–5

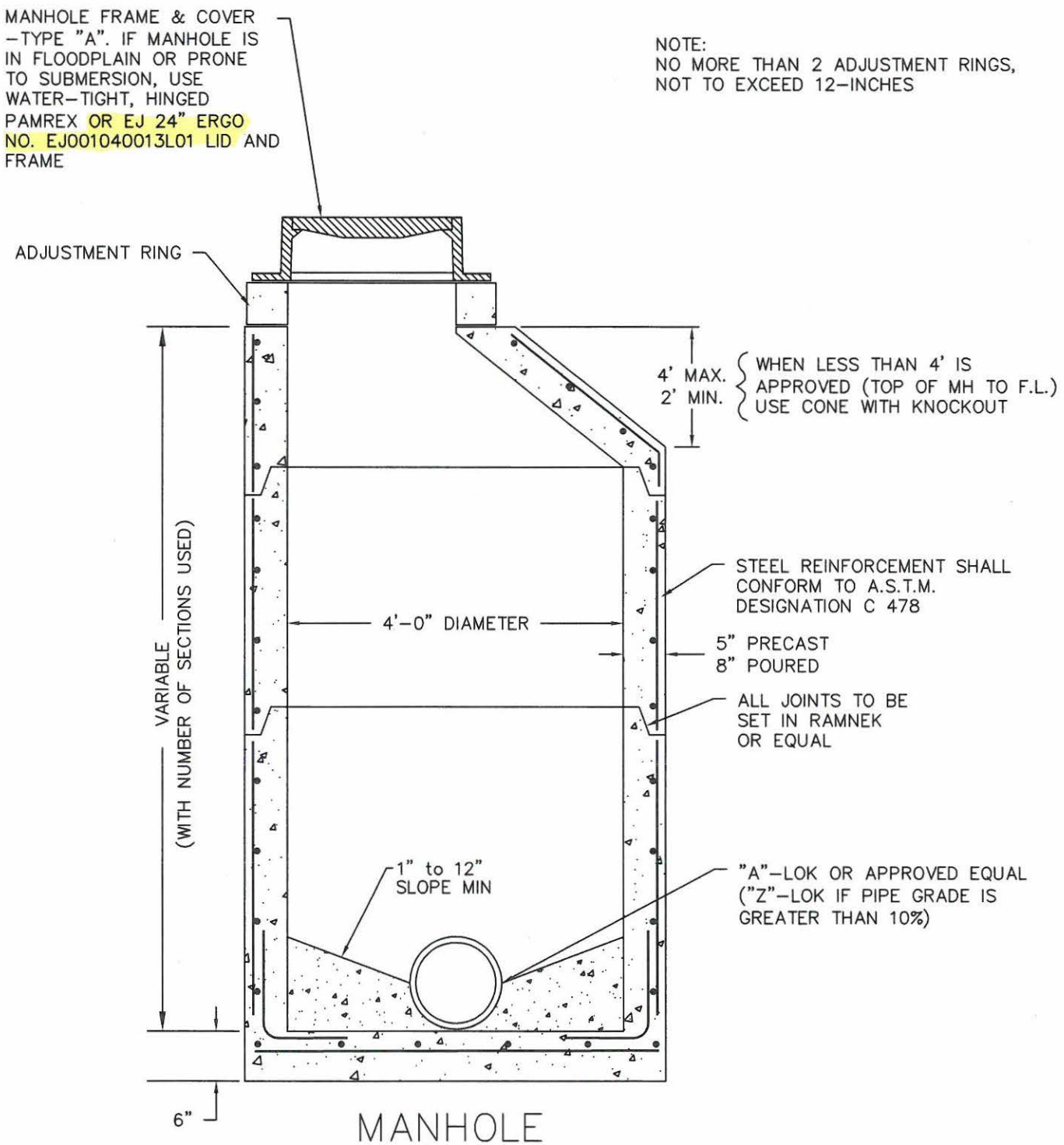

MANHOLE
8" TO 24" PIPE

DEPARTMENT OF PUBLIC WORKS SPRINGFIELD, MO.	STANDARD FOUR–FOOT DIAMETER MANHOLE	ADOPTED: ~~11–14–2014~~ 01-01-2015 SAN–3

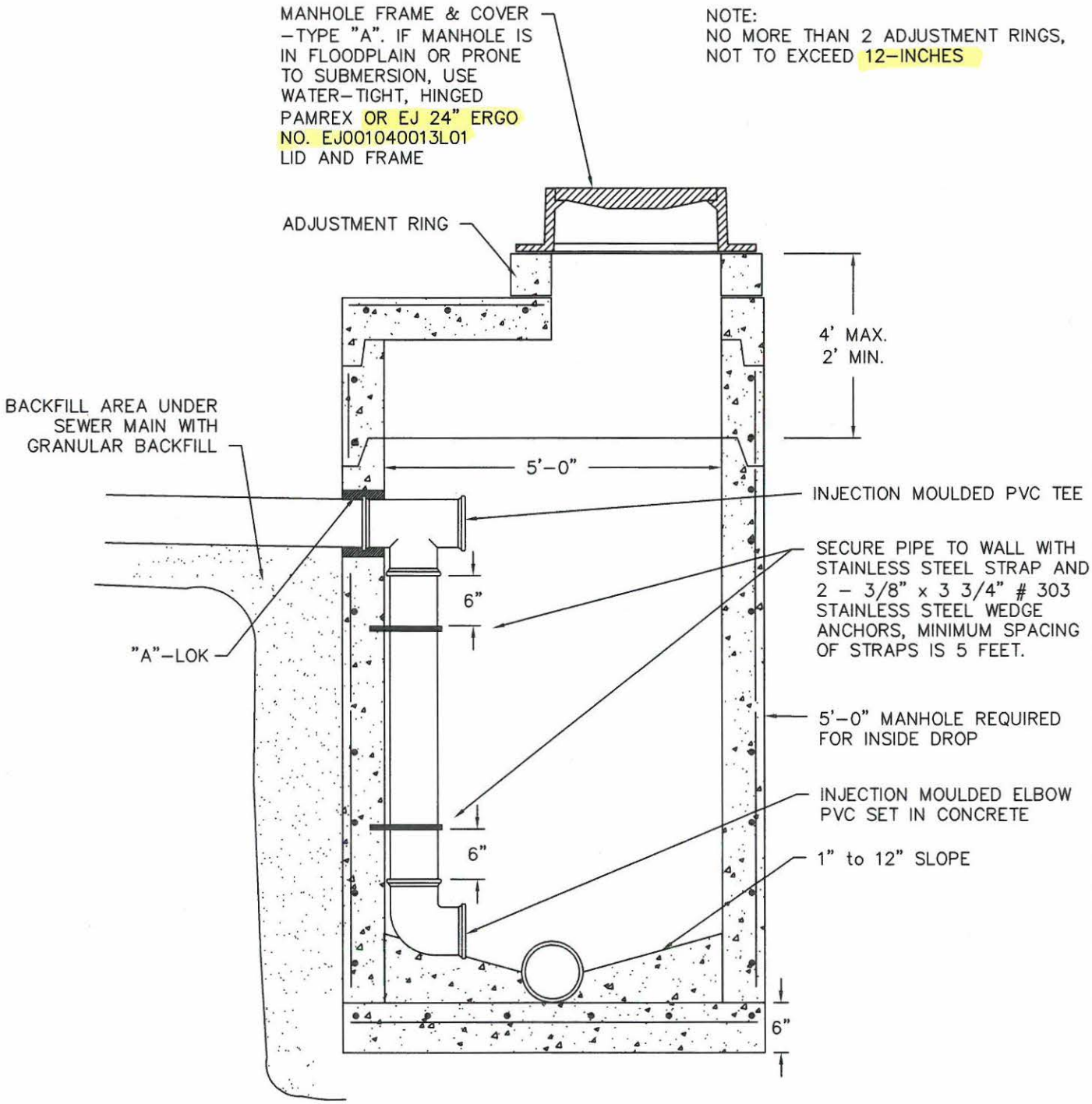

DISTANCE FROM PIPE INLET TO MANHOLE FLOWLINE FOR 8" PIPE.
0'–2' BUILD INSIDE FLUME
2'–3' SPECIAL DESIGN REQUIRED
3'– BUILD DROP MANHOLE

CONSTRUCTION METHODS FOR DROP MANHOLE TO BE SAME AS MANHOLE SAN–3

INSIDE DROP MANHOLE
8" TO 24" PIPE

01-01-2015

DEPARTMENT OF PUBLIC WORKS SPRINGFIELD, MO.	INSIDE DROP MANHOLE	ADOPTED: ~~11-14-2014~~ SAN–6

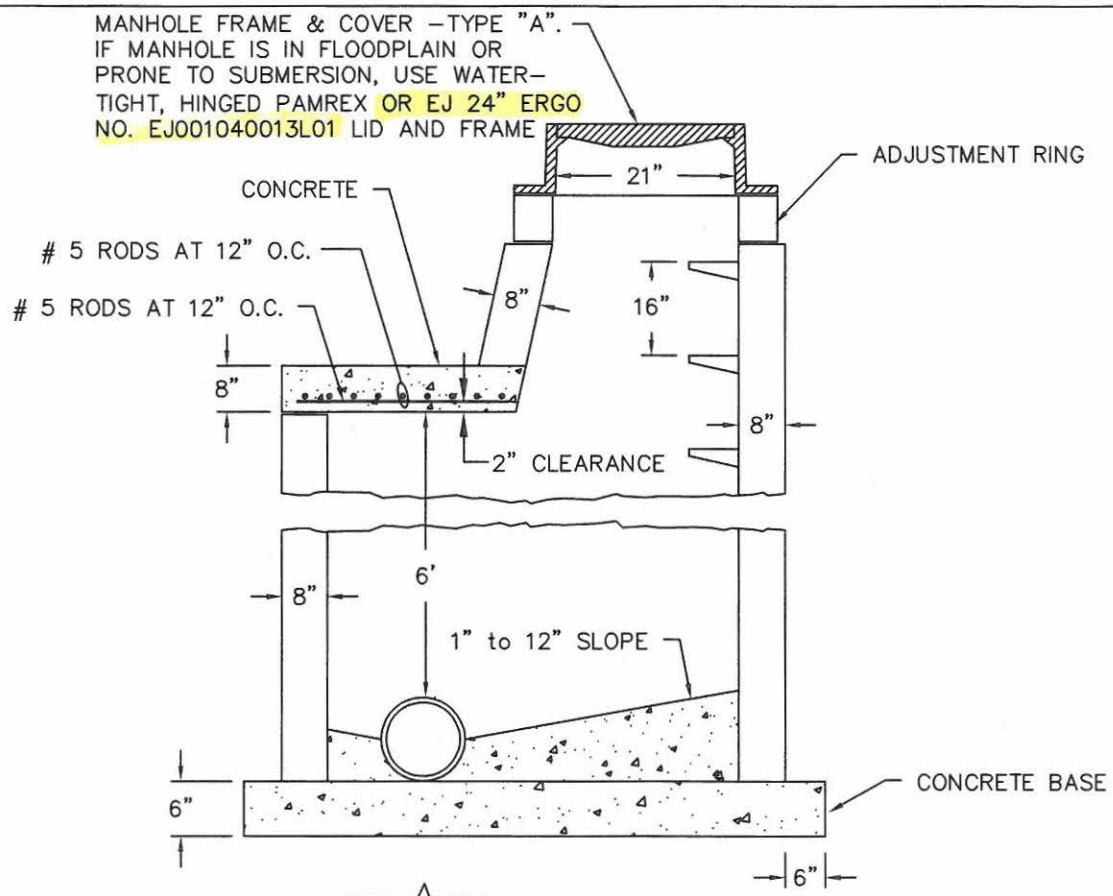

NOTES:

1. WALLS SHALL BE POURED CONCRETE OR PRECAST.

2. THICKNESS OF WALLS TO BE INCREASED TO 12" AT 12' BELOW UNDERSIDE OF FRAME.

3. CONSTRUCTION METHODS TO BE SAME AS STANDARD MANHOLES.

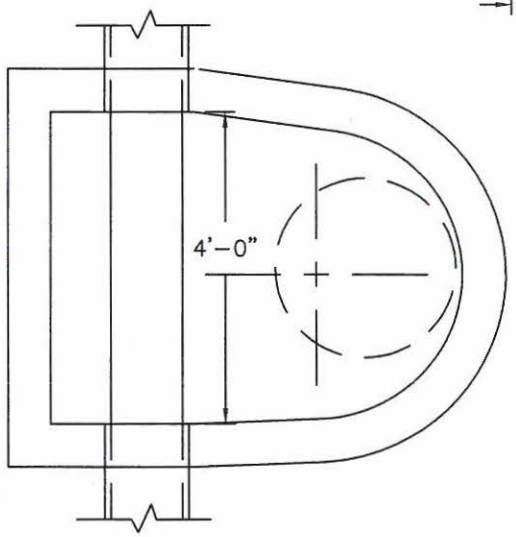

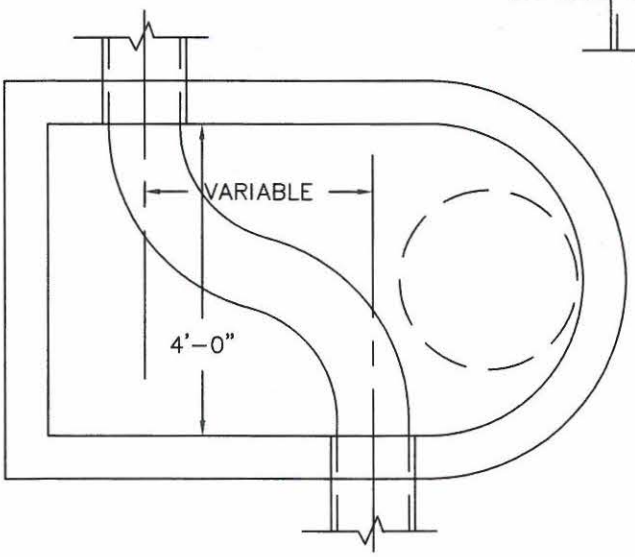

NOTE:
NO MORE THAN 2 ADJUSTMENT RINGS,
NOT TO EXCEED ~~18~~ 12 INCHES

DEPARTMENT OF PUBLIC WORKS SPRINGFIELD, MO.	OFFSET MANHOLE	ADOPTED: ~~11-14-2014~~ 01-01-2015 SAN–7

NEW

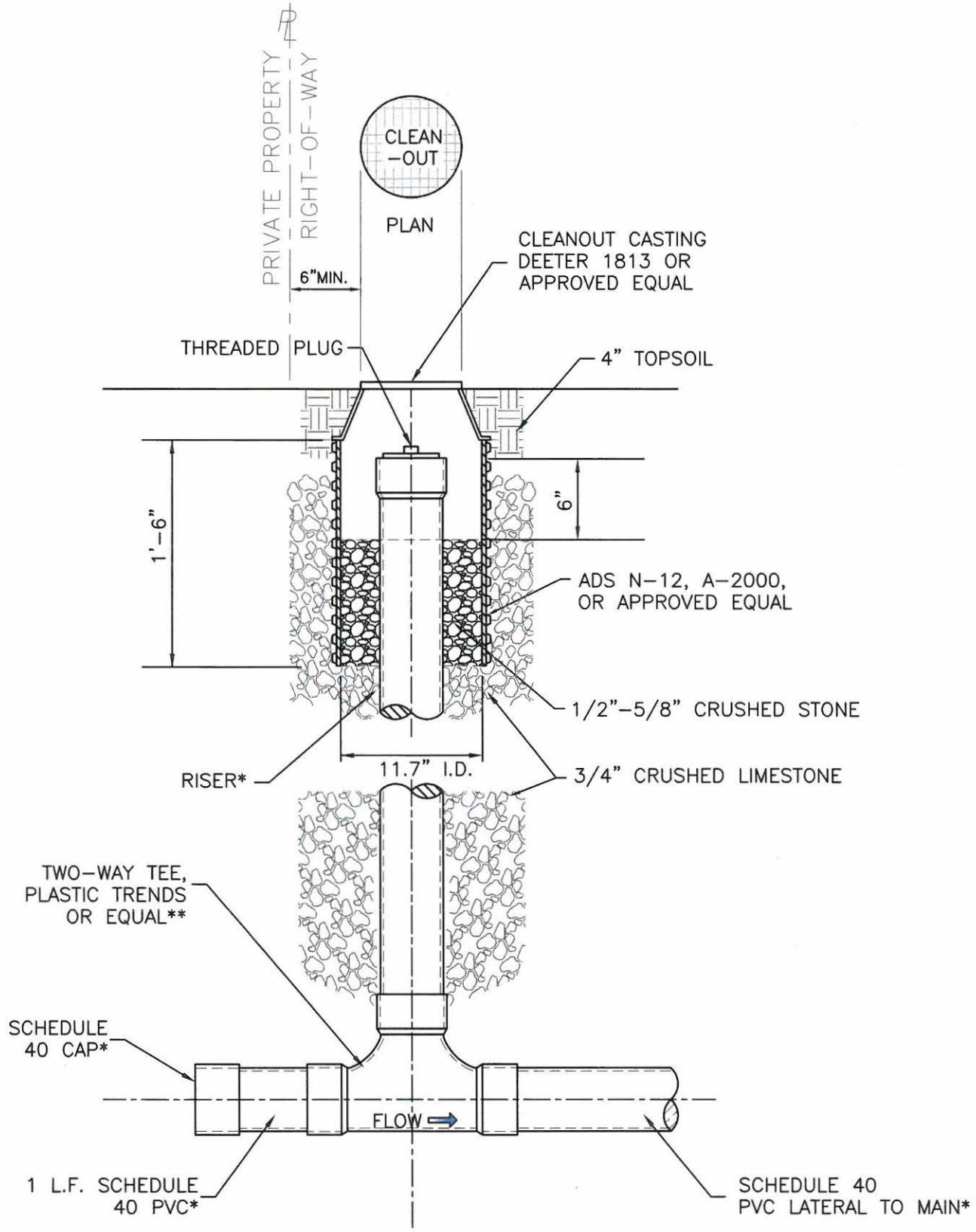

NOTES:
-NOT MAINTAINED BY ENVIRONMENTAL SERVICES.
-ADJUST LATERAL DEPTH AS NECESSARY TO AVOID UTILITY CONFLICT.
-RISER TO BE LOCATED A MIN. OF 6" INSIDE RIGHT-OF-WAY.
* 4" OR 6" SCHEDULE 40 PVC.
** 4"X4" NO. #D1004; 6"X6" NO. #D1006 BY PLASTIC TRENDS.

01-01-2015

DEPARTMENT OF PUBLIC WORKS SPRINGFIELD, MO.	TYPICAL CLEANOUT RISER	ADOPTED: ~~9-4-2014~~ SAN-24

NEW

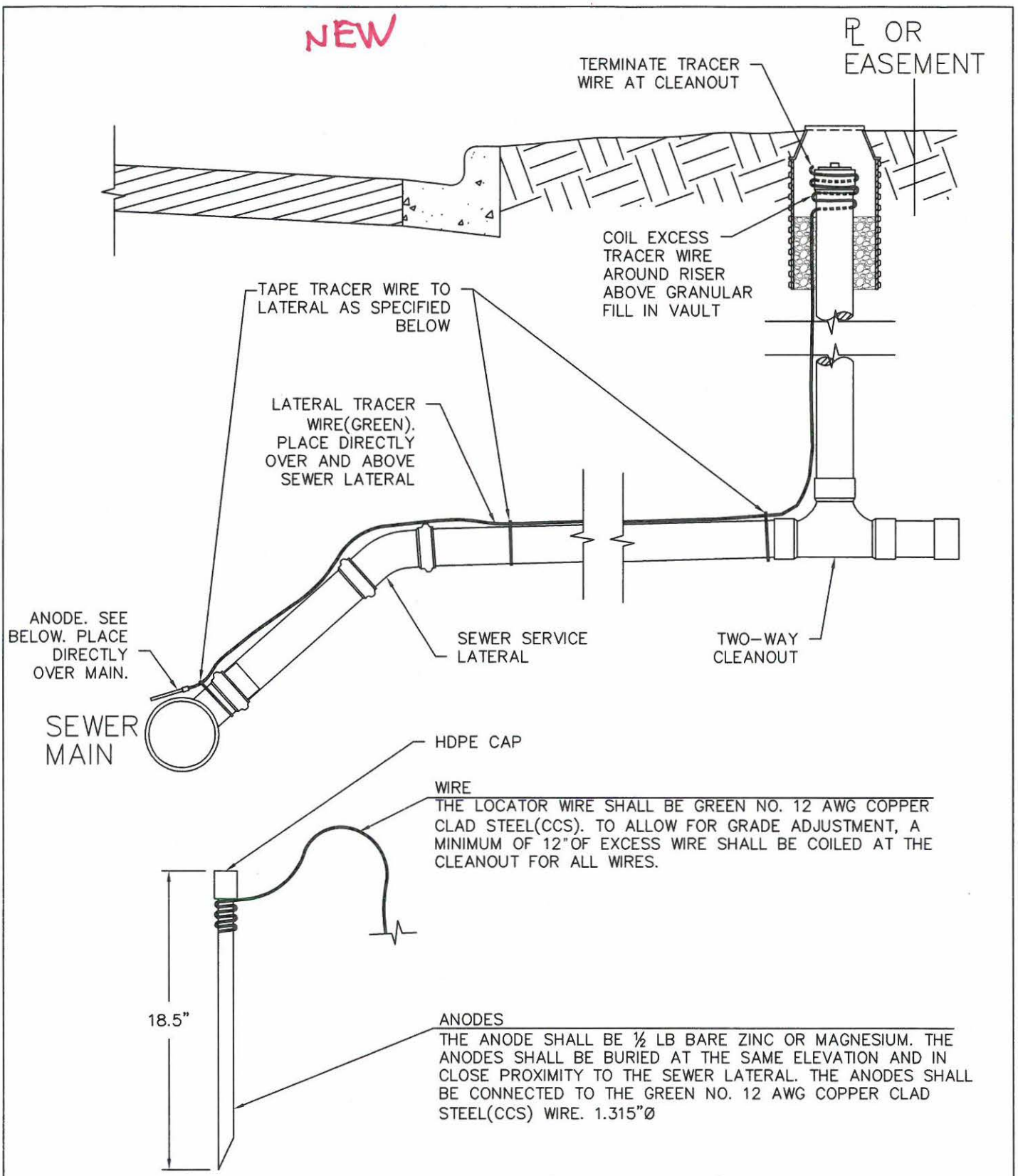

WIRE

THE LOCATOR WIRE SHALL BE GREEN NO. 12 AWG COPPER CLAD STEEL(CCS). TO ALLOW FOR GRADE ADJUSTMENT, A MINIMUM OF 12"OF EXCESS WIRE SHALL BE COILED AT THE CLEANOUT FOR ALL WIRES.

ANODES

THE ANODE SHALL BE ½ LB BARE ZINC OR MAGNESIUM. THE ANODES SHALL BE BURIED AT THE SAME ELEVATION AND IN CLOSE PROXIMITY TO THE SEWER LATERAL. THE ANODES SHALL BE CONNECTED TO THE GREEN NO. 12 AWG COPPER CLAD STEEL(CCS) WIRE. 1.315"Ø

TRACER WIRE DETAIL

CONDUCTIVE TYPE PIPE LOCATOR/TRACER WIRE SHALL BE INSTALLED TO LOCATE ALL SEWER LATERALS. THE WIRE SHALL EXTEND THE ENTIRE LENGTH OF THE PROPOSED LATERAL. THE WIRE SHALL BE INSTALLED DIRECTLY ON TOP THE PIPE AND SECURED TO THE LATERAL BY TAPE AT BASE OF RISER, SEWER MAIN AND EVERY 15'. CORROSION PROOF/FILLED WIRE CONNECTORS SHALL BE USED AT SPLICE LOCATIONS. ELECTRICAL TAPE SHALL BE USED AND NO BARE WIRE SHALL BE EXPOSED. TEST STATIONS SHALL BE INSTALLED INSIDE ALL CLEANOUT VAULTS AND EXISTING WIRES SHALL BE CONNECTED. ZINC OR MAGNESIUM ANODES SHALL BE ATTACHED AT BOTH THE BEGINNING AND THE END OF THE TRACER WIRE. A TYPICAL LAYOUT OF THE LOCATOR WIRE AND CLEANOUT IS PROVIDED IN THE FIGURE ABOVE. CONDUCTIVITY TO BE TESTED BEFORE ACCEPTANCE.

DEPARTMENT OF PUBLIC WORKS SPRINGFIELD, MO.	TRACER WIRE DETAIL	ADOPTED: ~~SEPT. 2014~~ 01-01-2015 SAN-25

DEPARTMENT OF PUBLIC WORKS
SPRINGFIELD, MO.

TYPE III POWER SUPPLY

ADOPTED:
TS-9A

NOT TO SCALE

Cabinet Requirements:
120/240 VAC, 1-Phase, 3-wire; 100 AMPS Maximum; Rainproof -Type 3R, Aluminum Enclosure, unpainted bare

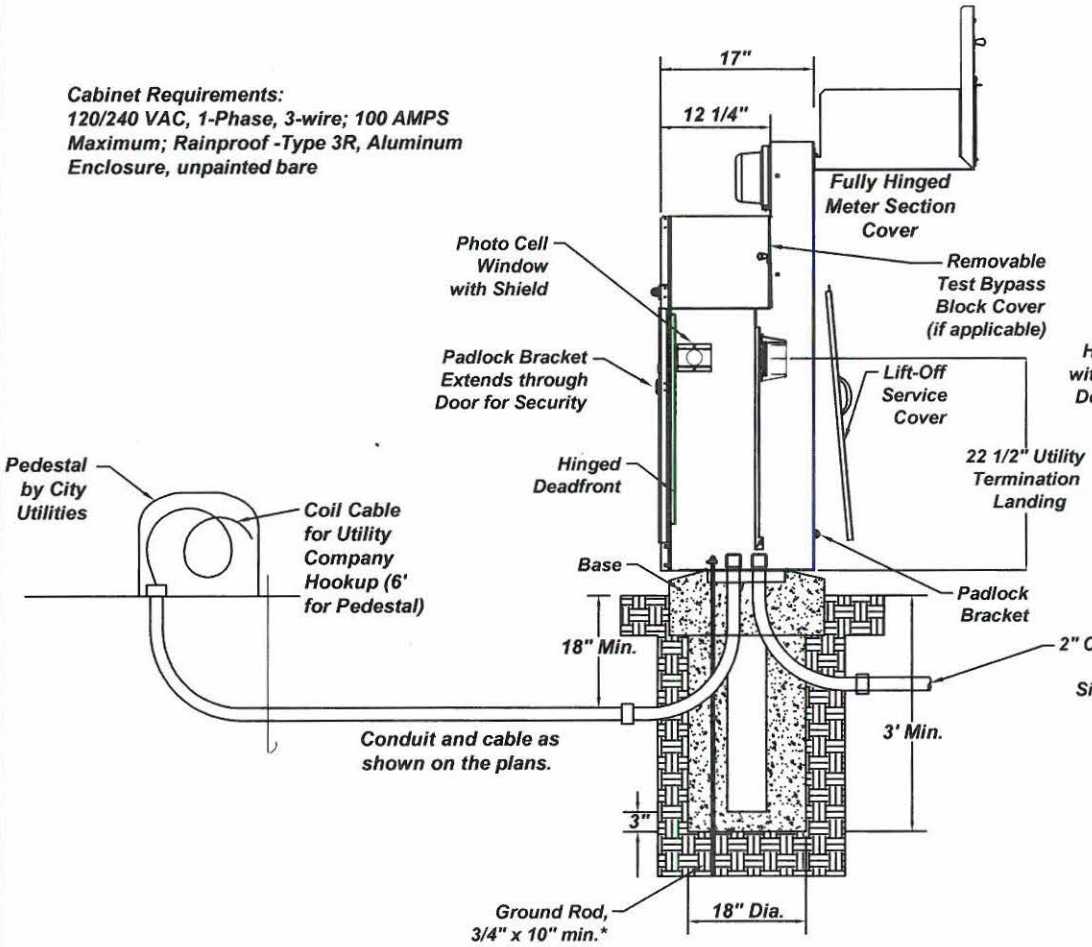

SIDE ELEVATION

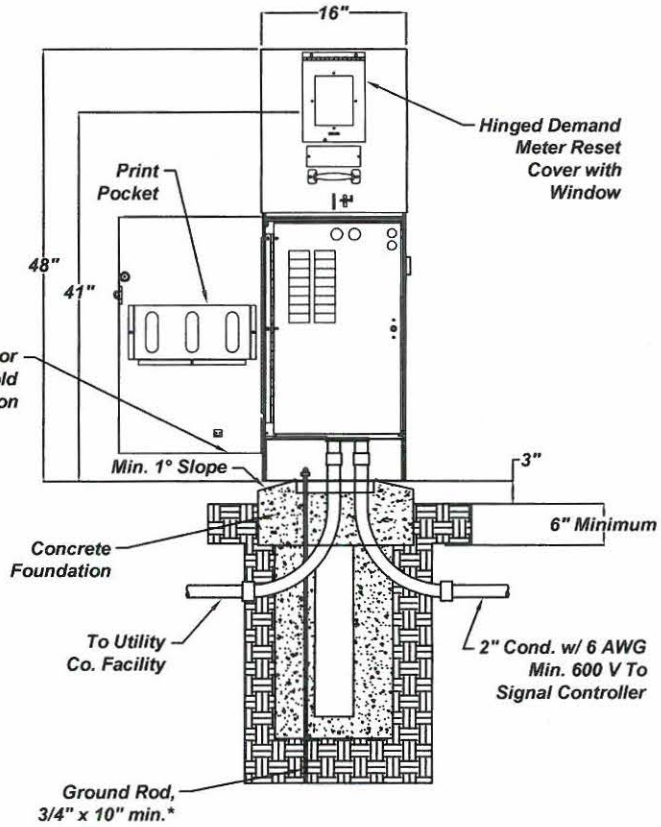

FRONT ELEVATION

*Drive two ground rods six feet apart.

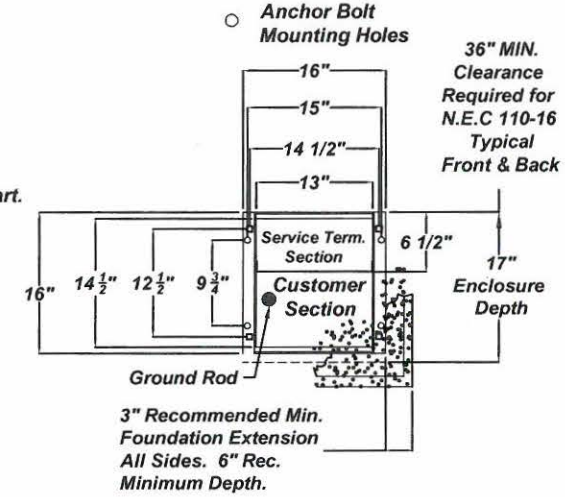

MOUNTING BASE DETAIL

3" Recommended Minimum Foundation Extension All Sides

6" Recommended Minimum Foundation Depth Below Grade Level

36" Minimum Pedestal Clearance Typical Front and Back Required per N.E.C. 110-16

(4) 5/8-11 X 18" (450MM 16 UNC) Anchor Bolts Recommended

NEW

The Contractor is required to obtain an Electrical permit from Building Development Services for new or relocated power supplies. The permit fee is the responsibility of the Contractor.