City of Springfield, Missouri

Standard Drawing Details for Public Improvements

Adopted: 7/1/2015

Dan Smith _____
Director of Public Works

STANDARD DRAWING DETAILS

1. STANDARD SANITARY SEWER DRAWINGS (SAN-PREFIX)

SAN-1	MANHOLE RING AND COVER (TYPE A)
SAN-2	MANHOLE RING AND COVER (NON-ROCKING)
SAN-3	S T A N D A R D FOUR-FOOT DIAMETER MANHOLE
SAN-4	NEW MANHOLE ON EXISTING LINE
SAN-5	UNASSIGNED
SAN-6	DROP MANHOLE
SAN-7	OFF SET MANHOLE
SAN-8	GASKET SEALING DETAILS FOR PRECAST MANHOLES
SAN-9	FLOW LINES FOR MANHOLE BASES
SAN-10	HOUSE CONNECTIONS – LESS THAN 12 FEET
SAN-11	HOUSE CONNECTIONS – 12 FEET TO 20 FEET
SAN-12	BEDDING STANDARDS
SAN-13	AMPHOLES
SAN-14	UNASSIGNED
SAN-15	BORING DETAILS
SAN-16	STANDARD CONE CONFIGURATION FOR MANHOLES
SAN-17	UNASSIGNED
SAN-18	GREASE INTERCEPTOR
SAN-19	SAMPLING MANHOLE
SAN-20	INSERT-A-TEE TAP
SAN-21	IMPERVIOUS TRENCH SEAL
SAN-22	CONNECTION TO LINED MANHOLES
SAN-23	CONNECTION TO EXISTING MANHOLES
SAN-24	TYPICAL CLEANOUT RISER
SAN-25	TRACER WIRE DETAIL

2. STANDARD STORM SEWER DRAWINGS (SS-PREFIX)

SS-1	STANDARD JUNCTION BOX
SS-2	STORM SEWER MANHOLE
SS-3	NON-RECESSED CURB INLET
SS-4-A	RING AND COVER FOR STORM SEWER INLET
SS-4-C	RING AND COVER FOR STORM SEWER INLET
SS-5	AREA INLET
SS-6	CURB INLET
SS-7	UNASSIGNED
SS-8	PRECAST INLET TOPS
SS-9	CONCRETE BOX TOP RIDING SURFACE
SS-10	CONCRETE BOX ROADWAY FILL
SS-11	APPROACH TO BOX CULVERTS
SS-12-A	UNASSIGNED
SS-12-B	VERTICAL & SLOPING SLOT OUTLET CALCULATION
SS-12-C	UNASSIGNED
SS-12-D	UNASSIGNED
SS-13	PAVED DITCH TRANSITIONS, DETAILS
SS-14-A	VEGATATIVE FILTER STRIP, WATER QUALITY BMP
SS-14-B	UNASSIGNED
SS-14-C	UNASSIGNED
SS-14-D	VERTICAL BOX DETENTION OUTLET
SS-15	CONCRETE BOX CULVERT, MINIMUM REINFORCEMENT DETAILS

3. STANDARD STREET DRAWINGS (ST-PREFIX)

ST-1	TYPICAL STREET SECTIONS
ST-2	CURB AND GUTTER/DRIVEWAY OPENING
ST-3	JOINT DETAILS – CONCRETE PAVEMENT
ST-4	JOINT LOCATION – CONCRETE PAVEMENT
ST-5	STANDARD CUL-DE-SAC
ST-6	PARKING STALL LAYOUT ELEMENTS
ST-7	MAILBOX PLACEMENT
ST-8	TYPICAL RESIDENTIAL DRIVEWAY & SIDEWALK
ST-9	TYPICAL COMMERCIAL DRIVEWAY & SIDEWALK
ST-10	CURB RAMP TYPE I
ST-11	CURB RAMP TYPE II
ST-12	CURB RAMP WITH DETECTABLE WARNING
ST-13	EXISTING PAVEMENT REPAIR DETAIL
ST-14	UNASSIGNED
ST-15	UNASSIGNED
ST-16	UNASSIGNED
ST-17	UNASSIGNED
ST-18	HANDRAIL
ST-19	TEMPORARY DEAD END STREET TURNAROUND
ST-20	PERMANENT DEAD END STREET TURNAROUND

4. STANDARD TRAFFIC SIGNAL DRAWINGS (SAN-PREFIX)

TS-1	SIGNAL SYMBOLS
TS-2	PREFORMED PULL BOXES
TS-3	CAST IN PLACE PULL BOX
TS-4	ALUMINUM PEDESTAL
TS-5	ALUMINUM MAST ARM
TS-6	STEEL MAST ARM
TS-7	POWER SUPPLY WIRING
TS-8	TYPE 1 POWER SUPPLY
TS-9	TYPE II POWER SUPPLY
TS-9A	TYPE III POWER SUPPLY
TS-10	LIGHTING CONTROLLER
TS-11	GROUNDING AND BONDING
TS-12	SIGNAL HEADS
TS-13	TYPE “A” SIGNAL BASE
TS-14	TYPE “D” SIGNAL BASE
TS-15	CONTROLLER BASES
TS-16	TRENCH AND CONDUIT DETAIL
TS-17	SIGNAL PHASING LAYOUT
TS-18	DETECTOR LOOP INSTALLATION
TS-19	PEDESTRIAN PUSHBUTTONS
TS-20	SPAN WIRE DETAILS WOOD POLES

5. STANDARD LANDSCAPE/IRRIGATION DRAWINGS (SAN-PREFIX)

LI-1	TYPICAL SLEEVING DETAIL
LI-2	TYPICAL TRENCHING DETAIL
LI-3	SURGE PROTECTOR CONNECTION
LI-4	DRIPLINE LAYOUT AT SHRUB BEDS
LI-5	DRIPLINE AT SOLO TREE LOCATION
LI-6	DRIPLINE TUBING
LI-7	AIR VACUM RELIEF VALVE
LI-8	PREFORMED IRRIGATION BULL BOX
LP-1	TREE DETAIL
LP-2	SHURB IN TOPSOIL
LP-3	SHOVEL-CUT EDGE

MANHOLE RING & COVER
TYPE "A"

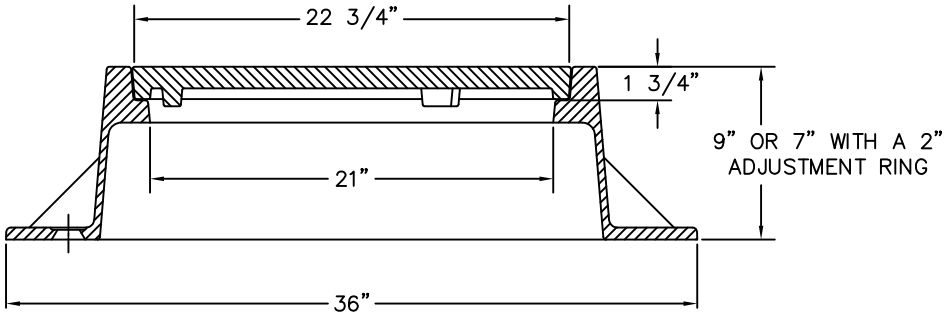

TYPE "A" SECTION VIEW

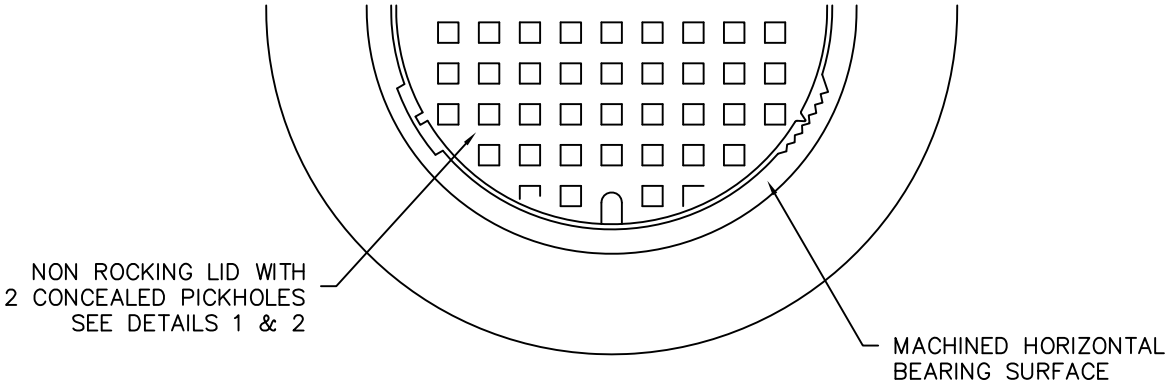

TOTAL WEIGHT
RING AND COVER
TYPE "A" = 540 lbs.

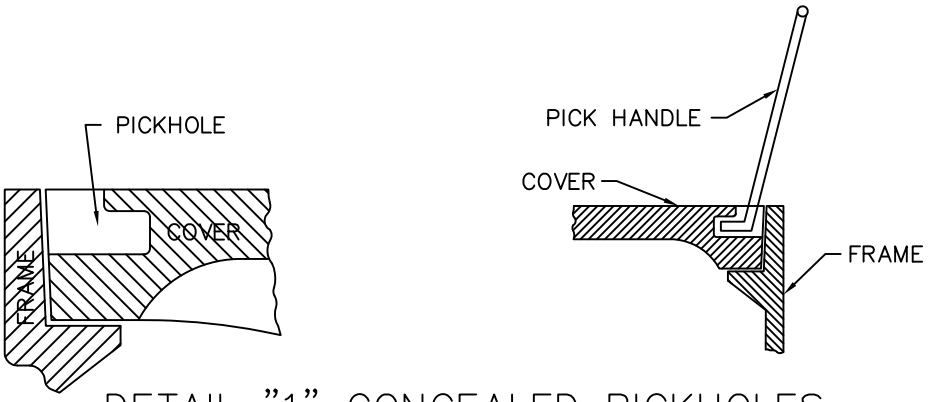

DETAIL "1" CONCEALED PICKHOLES

DEPARTMENT OF PUBLIC WORKS SPRINGFIELD, MO.	MANHOLE RING AND COVER (TYPE "A")	ADOPTED: 11-6-2012 SAN-1

DETAIL "2" NON ROCKING COVER

SEE SAN-1 FOR TYPE "A" SECTION VIEW

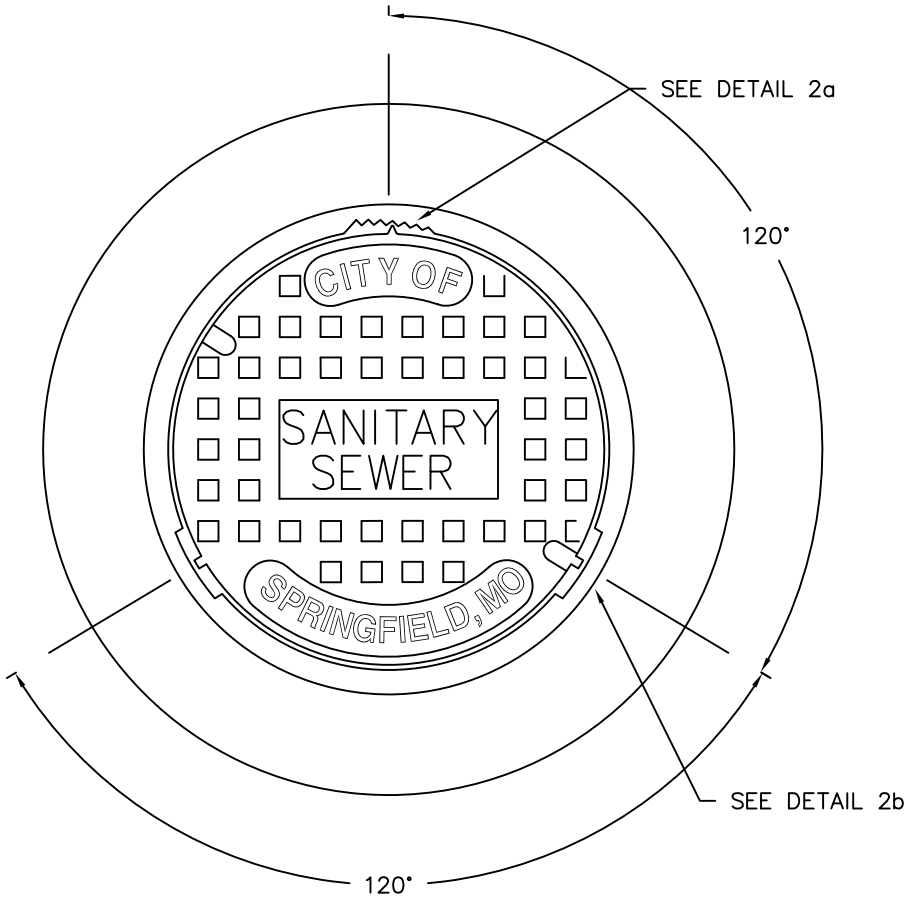

LOADS HS20
COMPONENT NOS.: FRAME NEENAH 1715-2001, LID 1715-XXXX
MATERIAL: CAST GRAY IRON ASTM A-48, CLASS 35B
FINISH: NO PAINT
WEIGHT: FRAME APPROX. 234#, LID APPROX. 127#

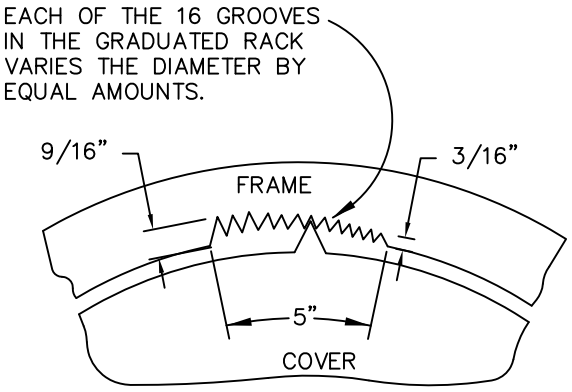

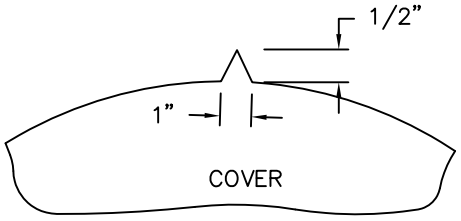

DETAIL 2a

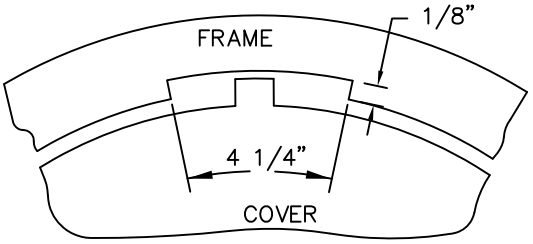

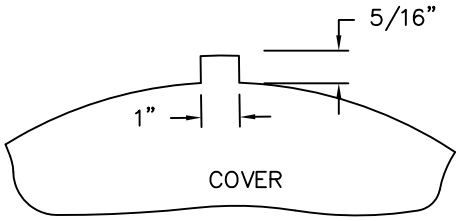

DETAIL 2b

DEPARTMENT OF PUBLIC WORKS SPRINGFIELD, MO.	MANHOLE RING AND COVER (NON-ROCKING)	ADOPTED: 11-6-2012 SAN-2

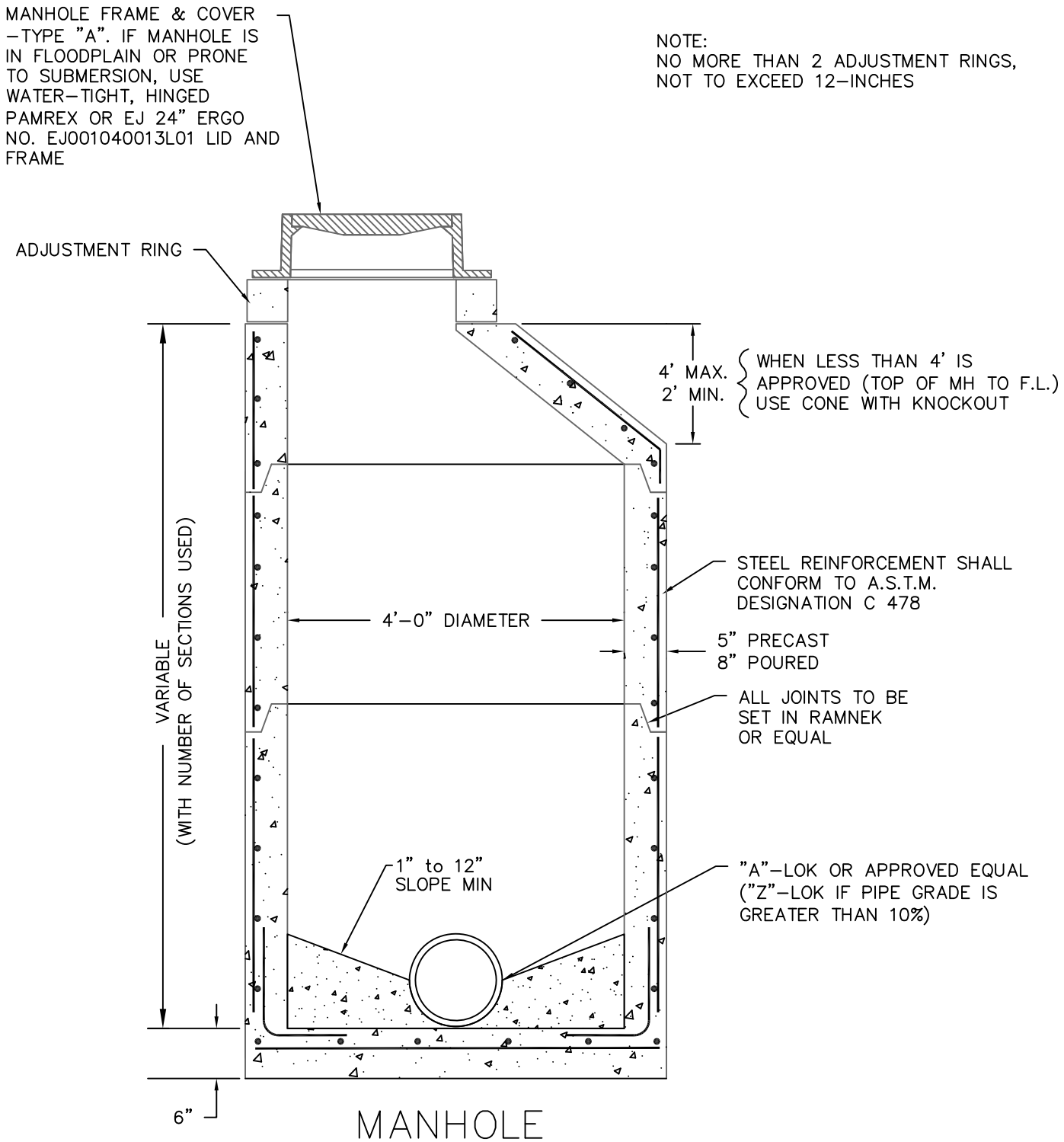

MANHOLE
8" TO 24" PIPE

DEPARTMENT OF PUBLIC WORKS SPRINGFIELD, MO.	STANDARD FOUR–FOOT DIAMETER MANHOLE	ADOPTED: 7–1–2015 SAN–3

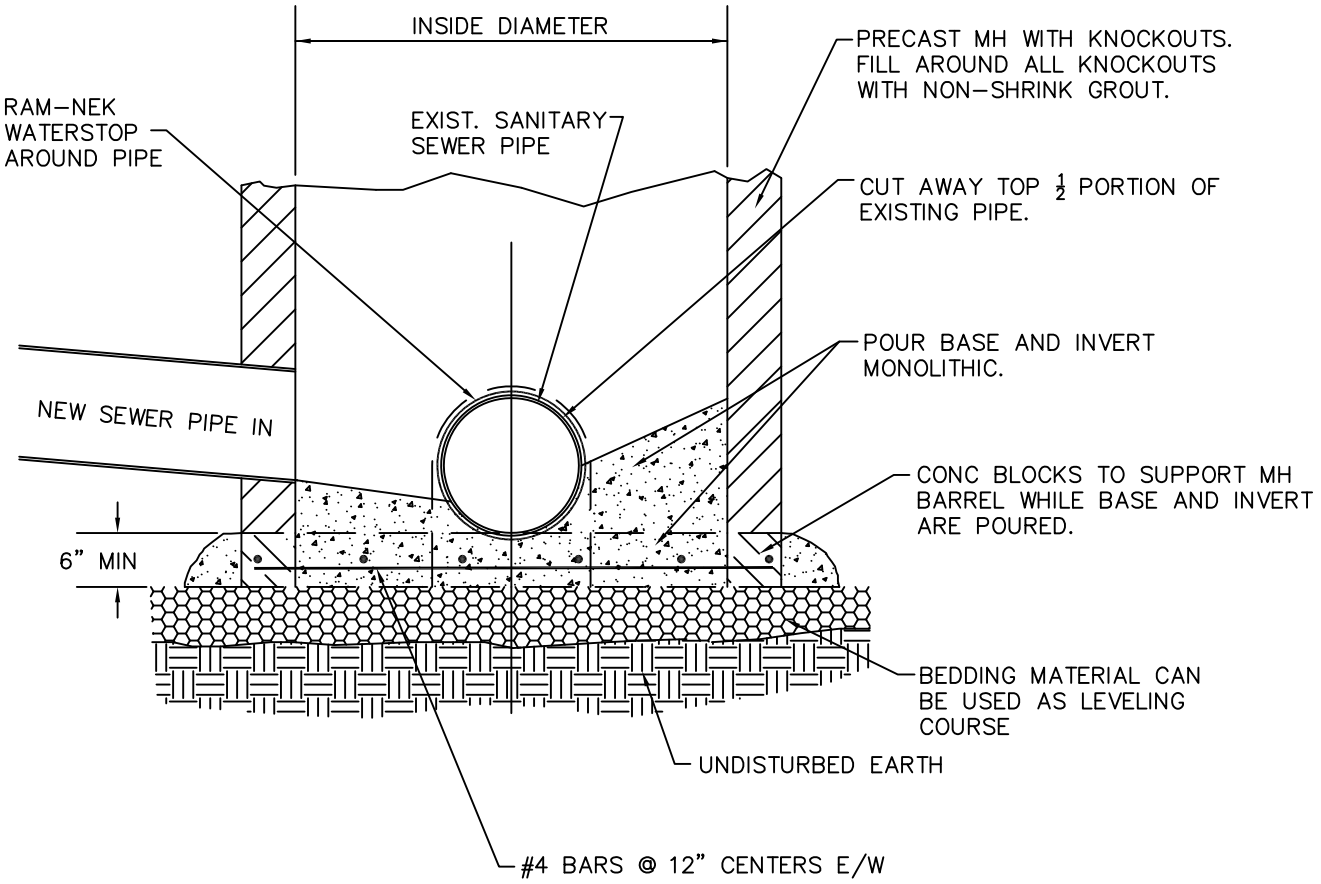

DEPARTMENT OF PUBLIC WORKS SPRINGFIELD, MO.	NEW MANHOLE ON EXISTING LINE	ADOPTED: 11-6-2012 SAN-4

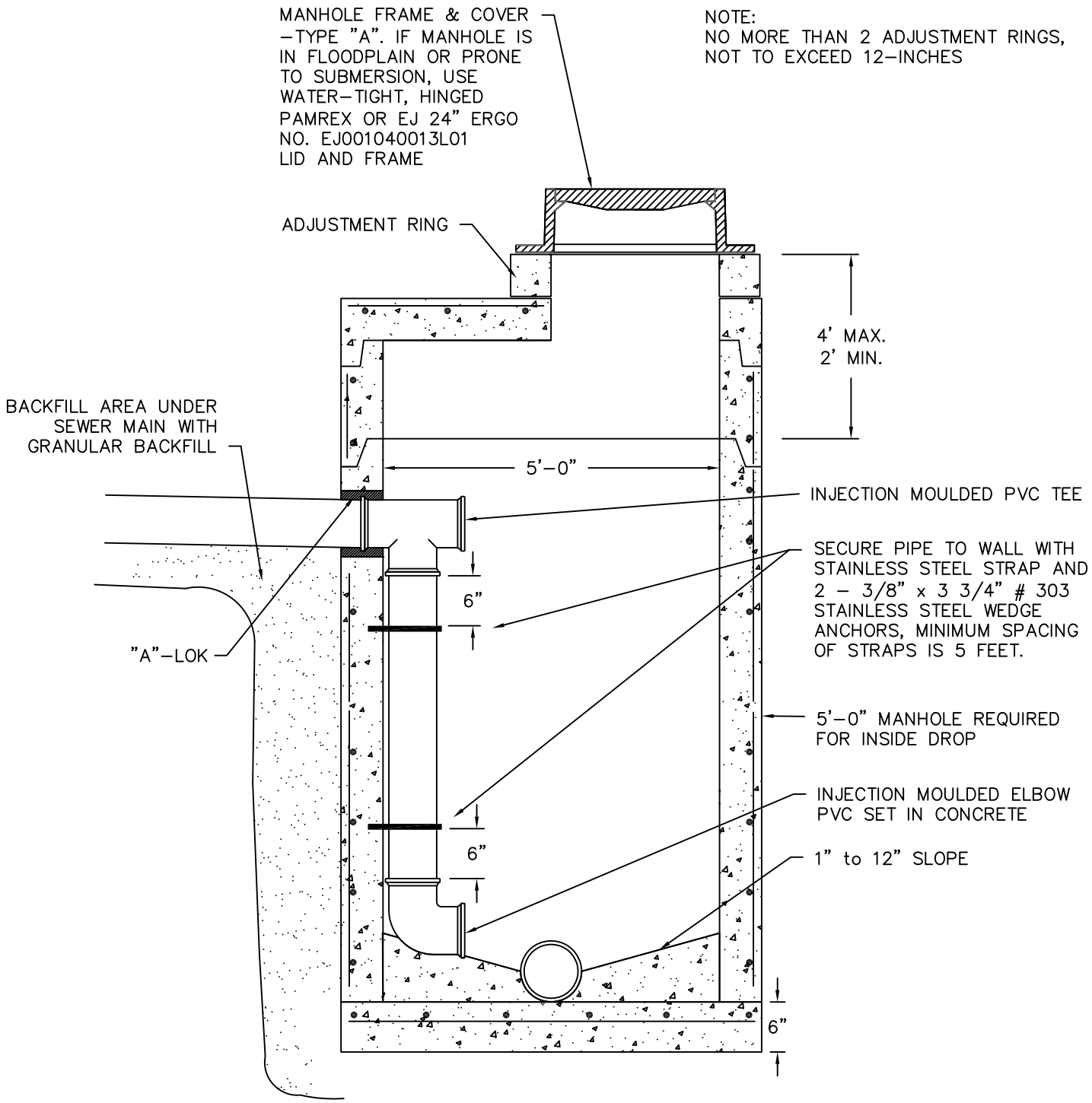

DISTANCE FROM PIPE INLET TO MANHOLE FLOWLINE FOR 8" PIPE.
0'–2' BUILD INSIDE FLUME
2'–3' SPECIAL DESIGN REQUIRED
3'– BUILD DROP MANHOLE

CONSTRUCTION METHODS FOR DROP MANHOLE TO BE SAME AS MANHOLE SAN–3

INSIDE DROP MANHOLE
8" TO 24" PIPE

DEPARTMENT OF PUBLIC WORKS SPRINGFIELD, MO.	INSIDE DROP MANHOLE	ADOPTED: 7–1–2015 SAN–6

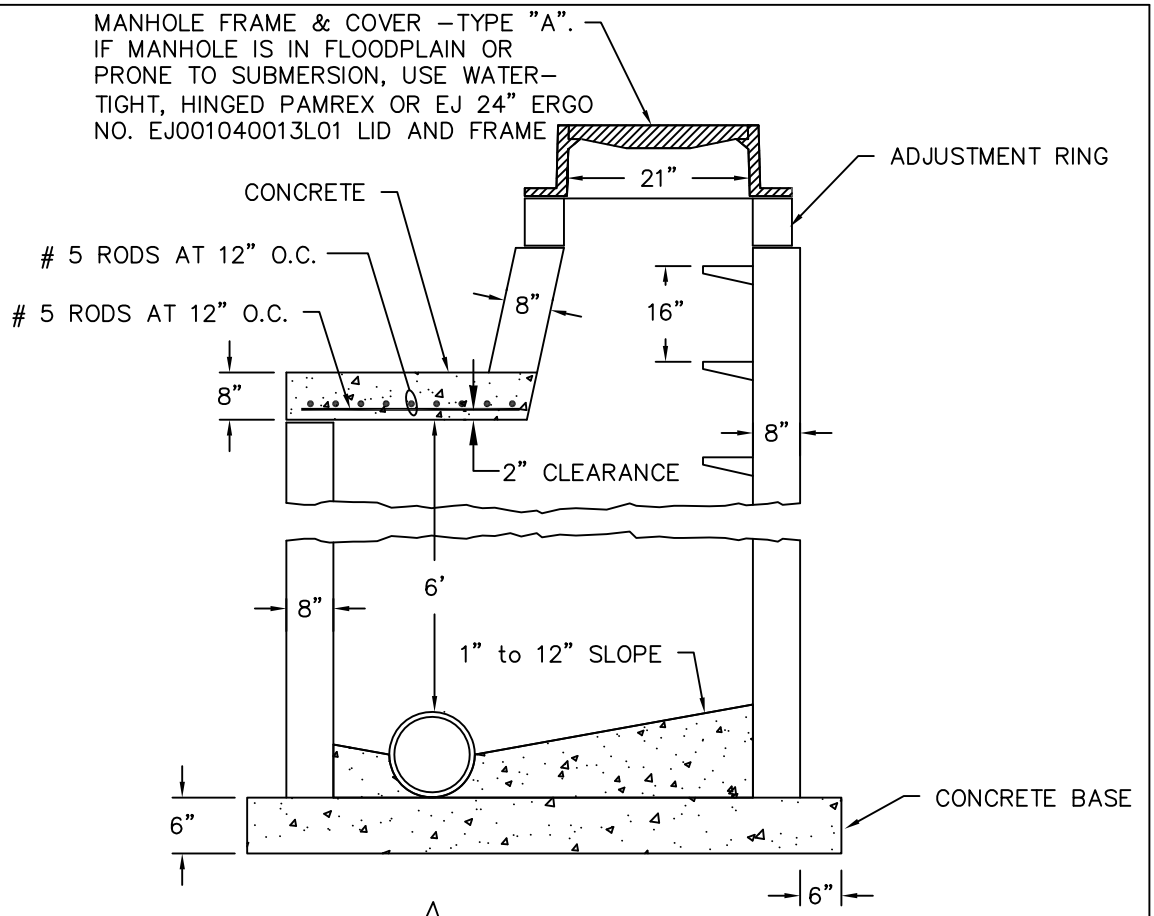

NOTES:

1. WALLS SHALL BE POURED CONCRETE OR PRECAST.

2. THICKNESS OF WALLS TO BE INCREASED TO 12" AT 12' BELOW UNDERSIDE OF FRAME.

3. CONSTRUCTION METHODS TO BE SAME AS STANDARD MANHOLES.

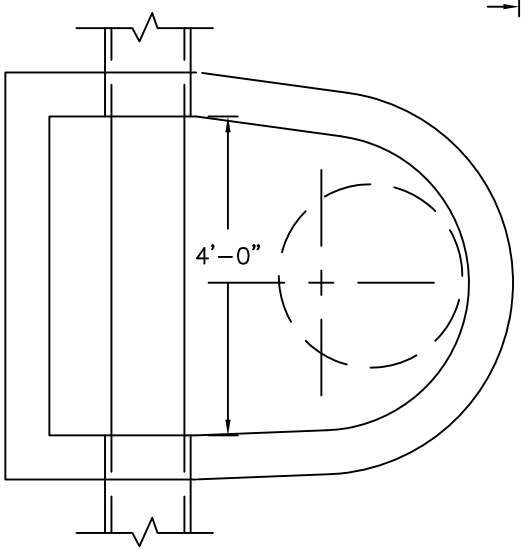

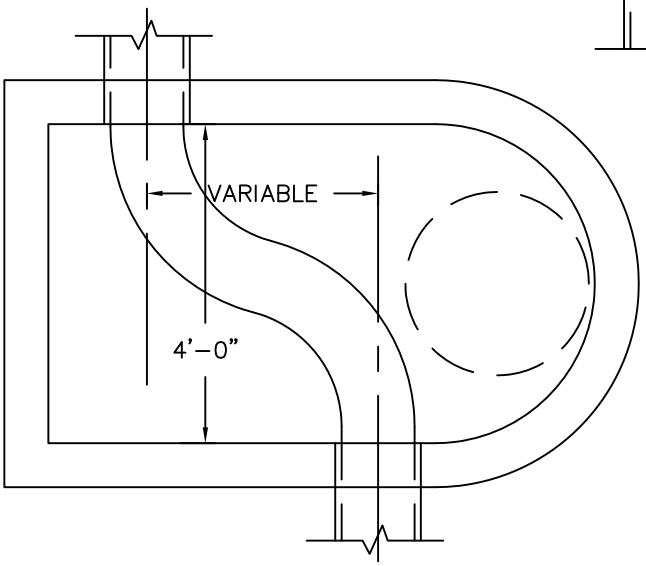

NOTE:
NO MORE THAN 2 ADJUSTMENT RINGS, NOT TO EXCEED 18–INCHES

DEPARTMENT OF PUBLIC WORKS SPRINGFIELD, MO.	OFFSET MANHOLE	ADOPTED: 7–1–2015 SAN–7

BITUMASTIC INSTALLATION (OR EQUAL)

SEALING OF TONGUE & GROOVE PRECAST MANHOLES

1. SURFACE PREPARATION (CLEANING)

REMOVE ALL LOOSE PARTICLES, DUST, DIRT, ETC.

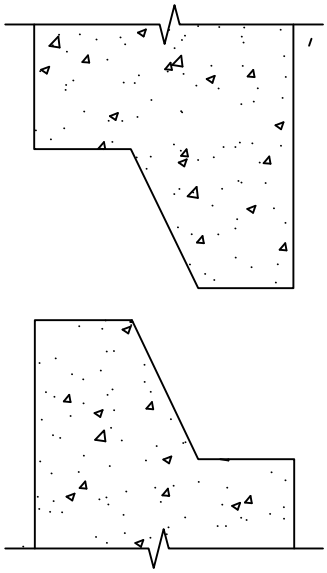

2. APPLYING BITUMASTIC SEAL

PLACE BITUMASTIC ROPE OR EQUAL IN GROOVE.

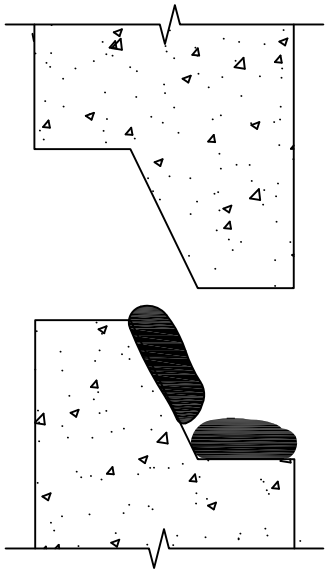

3. COMPLETION OF BITUMASTIC SEAL

LOWER THE NEXT LENGTH OF PIPE (TONGUE INTO GROOVE) AND SEAL WILL BE ACCOMPLISHED BY WEIGHT OF PIPE.

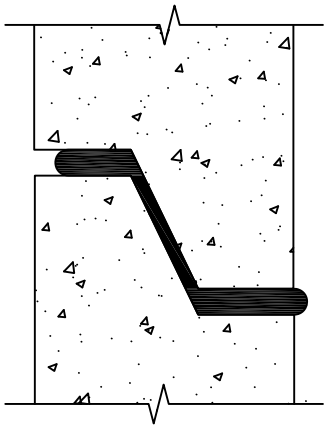

APPLYING ROPE SEAL

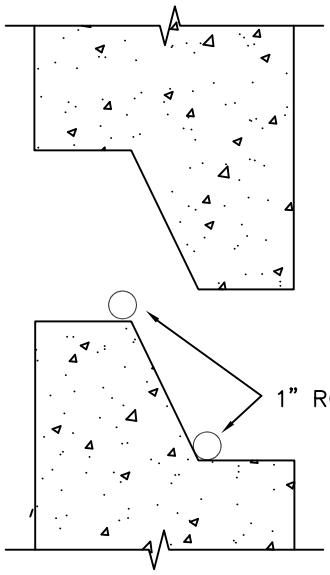

DEPARTMENT OF PUBLIC WORKS SPRINGFIELD, MO.	GASKET SEALING DETAILS FOR PRECAST MANHOLES	ADOPTED: 11-6-2012 SAN-8

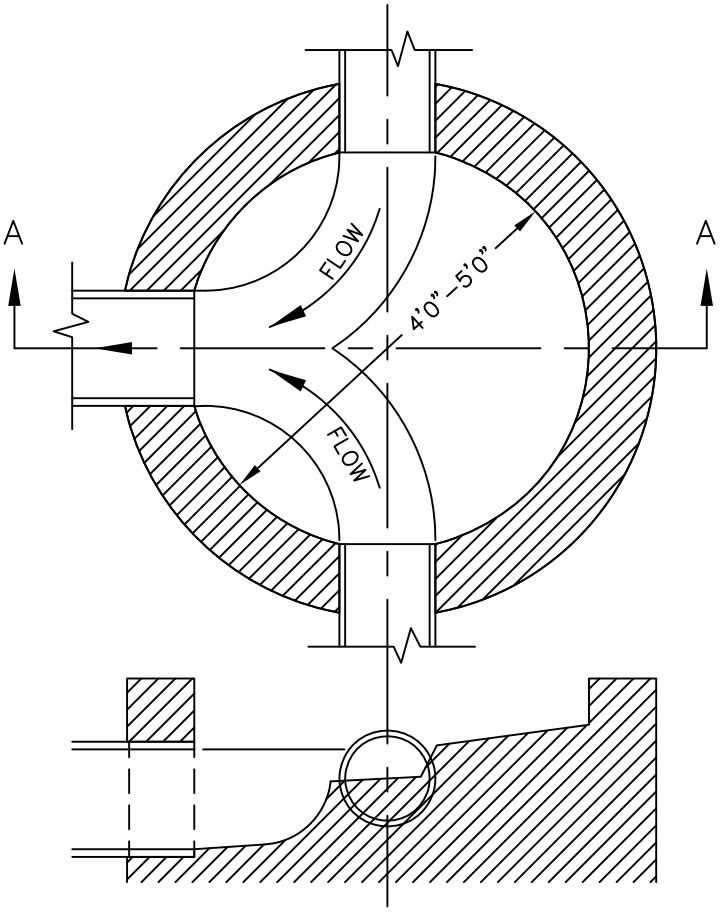

SECTION A–A

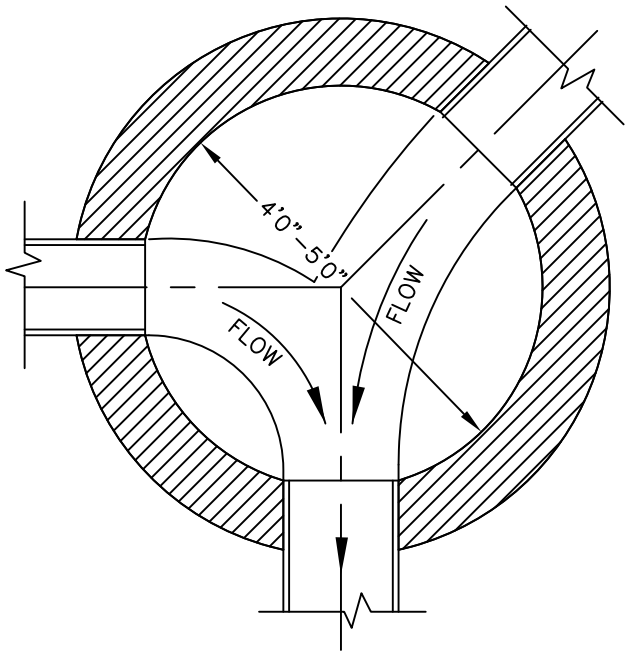

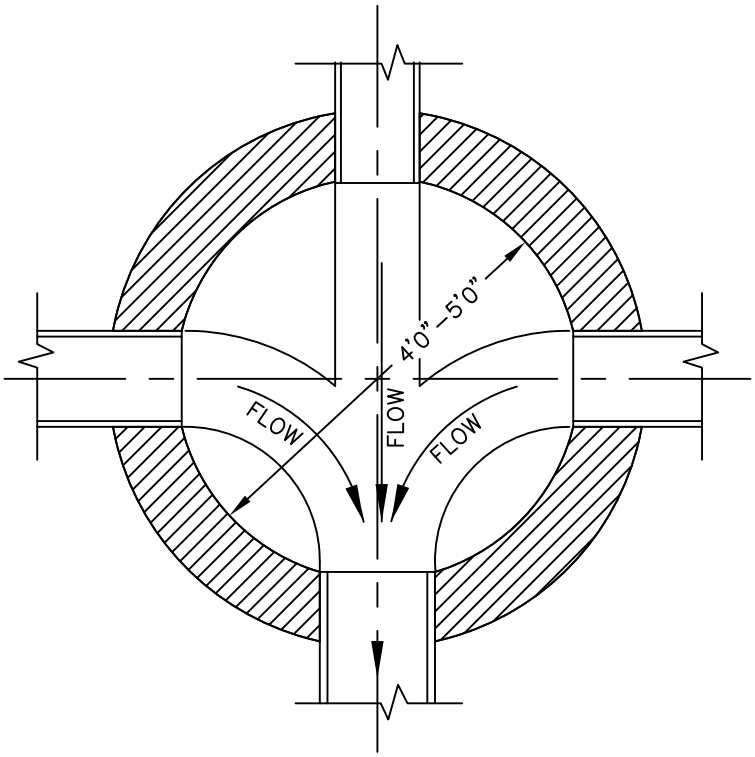

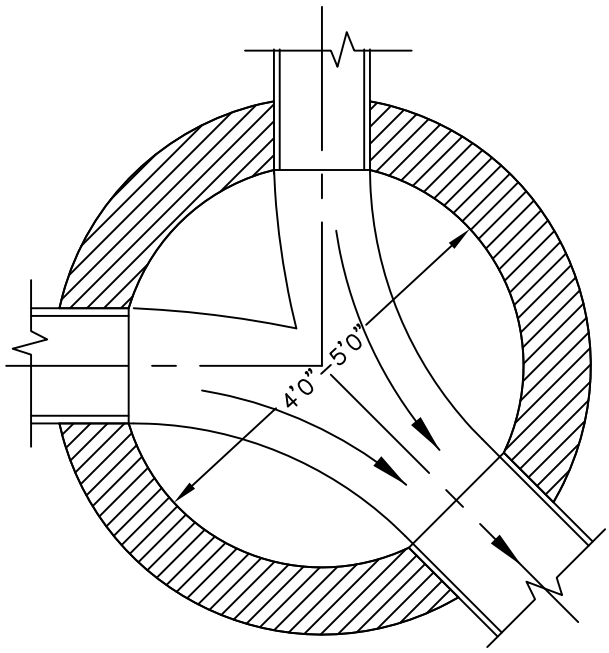

PIPES CANNOT ENTER MANHOLES AT ANGLES LESS THAN 90° TO EACH OTHER.

DEPARTMENT OF PUBLIC WORKS SPRINGFIELD, MO.	FLOWLINES FOR MANHOLE BASES	ADOPTED: 11–6–2012 SAN–9

NOTE:

MOULDED TEES ARE REQUIRED FOR ALL LATERALS ON NEW SEWER LINES. ALL LATERALS SHALL BE SCHEDULE 40 PIPE AND JOINTS SHALL BE GLUED WITH AN APPROVED ADHESIVE.

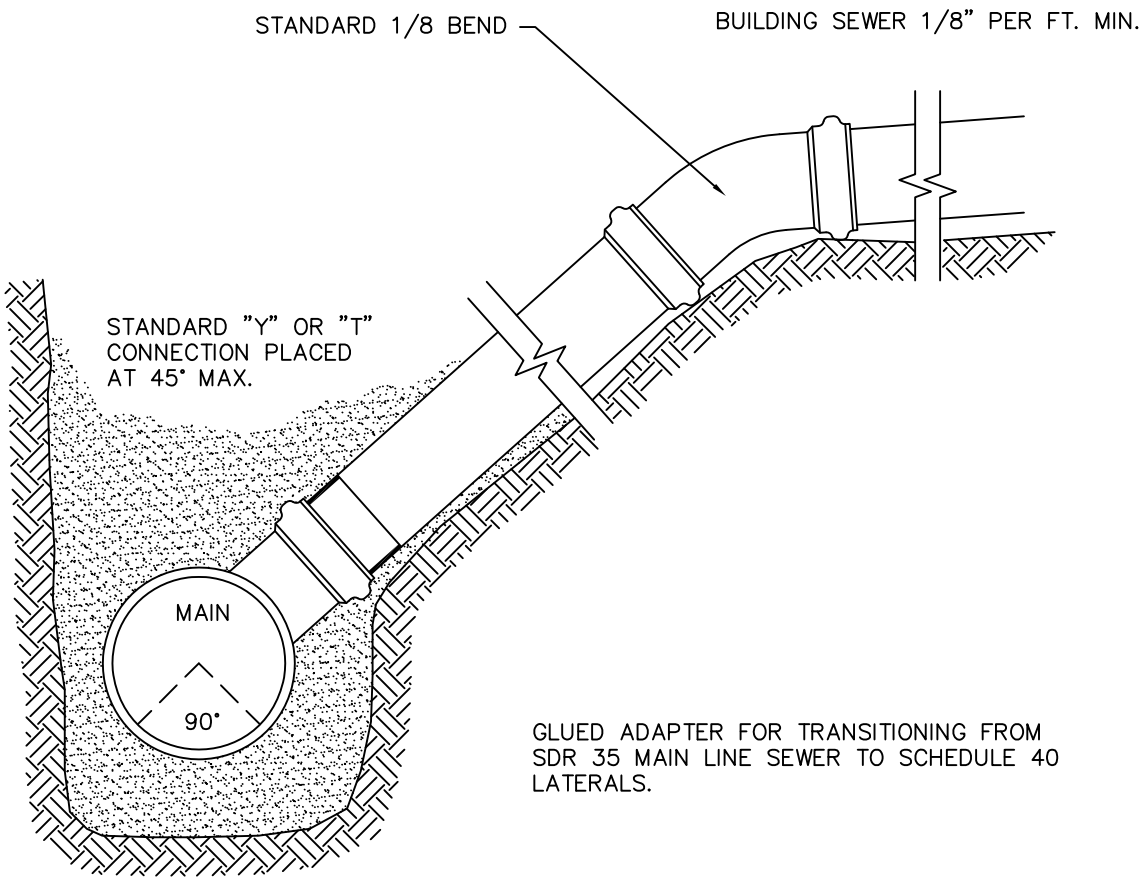

DEPARTMENT OF PUBLIC WORKS SPRINGFIELD, MO.	HOUSE CONNECTIONS – LESS THAN 12'	ADOPTED: 11–6–2012 SAN–10

NOTE:

1. MINIMUM OF 2' CLEARANCE TO BE MAINTAINED BETWEEN LATERAL LOCATIONS.

2. FOR SEWERS DEEPER THAN 20', A DESIGN SHALL BE SUBMITTED TO THE DEPARTMENT OF PUBLIC WORKS FOR APPROVAL.

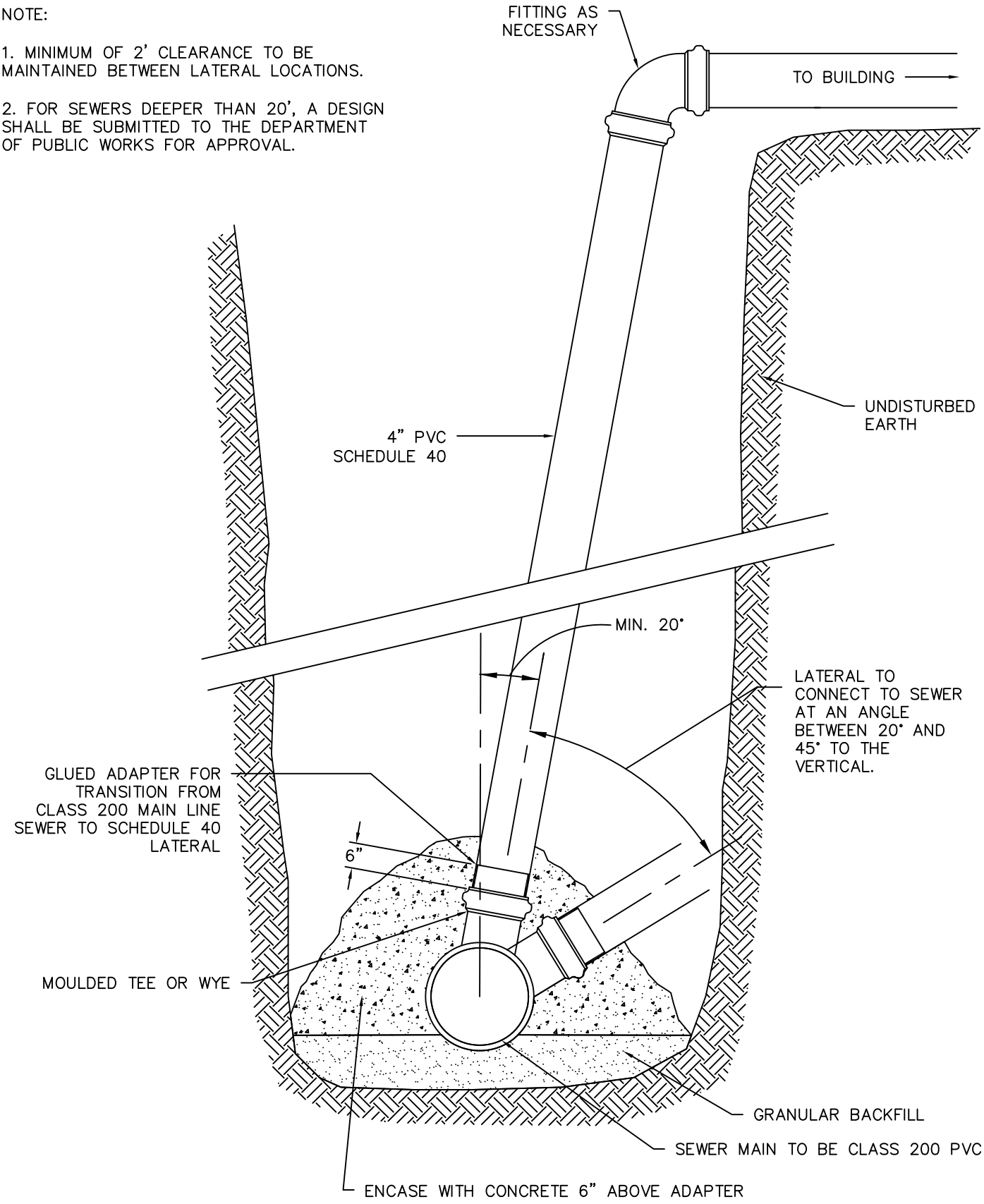

DEPARTMENT OF PUBLIC WORKS SPRINGFIELD, MO.	HOUSE CONNECTIONS – 12 FEET TO 20 FEET	ADOPTED: 11–6–2012 SAN–11

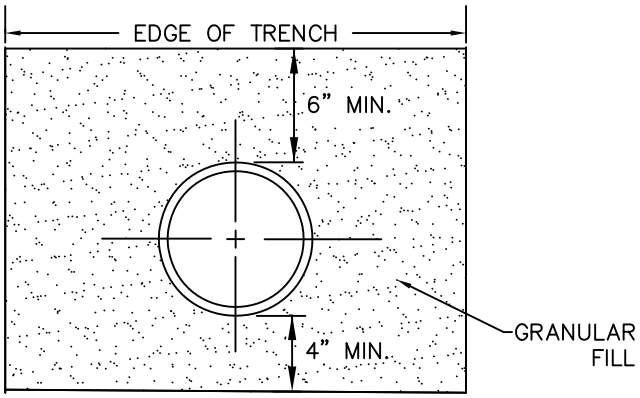

MINIMUM DEPTH OF GRANULAR BACKFILL -- 1/4 PIPE DIAMETER BUT NEVER LESS THAN 4" BELOW THE PIPE AND A MINIMUM OF 6" ABOVE THE PIPE.

GRANULAR BACKFILL MUST CONFORM TO BEDDING MATERIAL. (IN CUTS GREATER THAN 12' MINIMUM AGGREGATE COVER IS 12")

IMPROVED BEDDING

NOTE: W = TRENCH WIDTH
W = O.D. + 2E
E = 9" (6" to 24" PIPE)
E = 12" (27" to 36" PIPE)
E = 15" (42" to 72" PIPE)

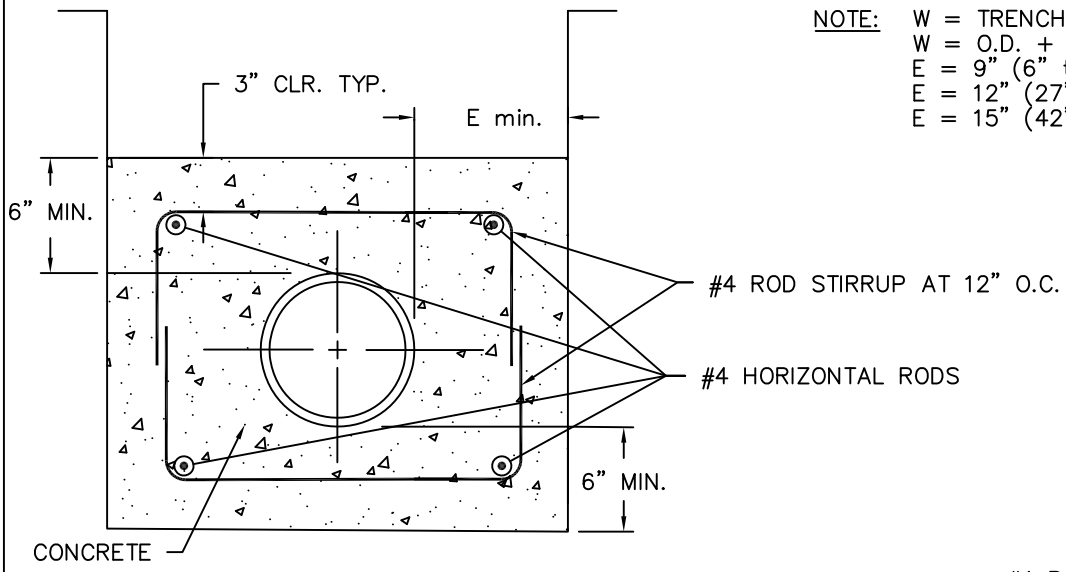

CONCRETE ENCASEMENT IF ON SOIL

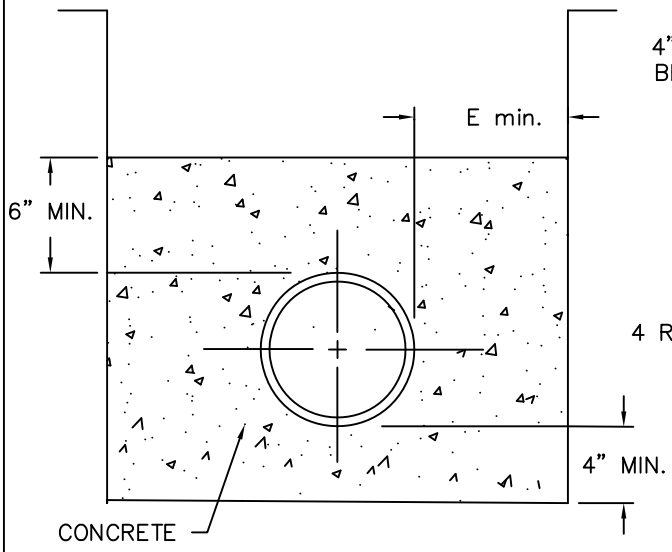

CONCRETE ENCASEMENT IF ON BEDROCK

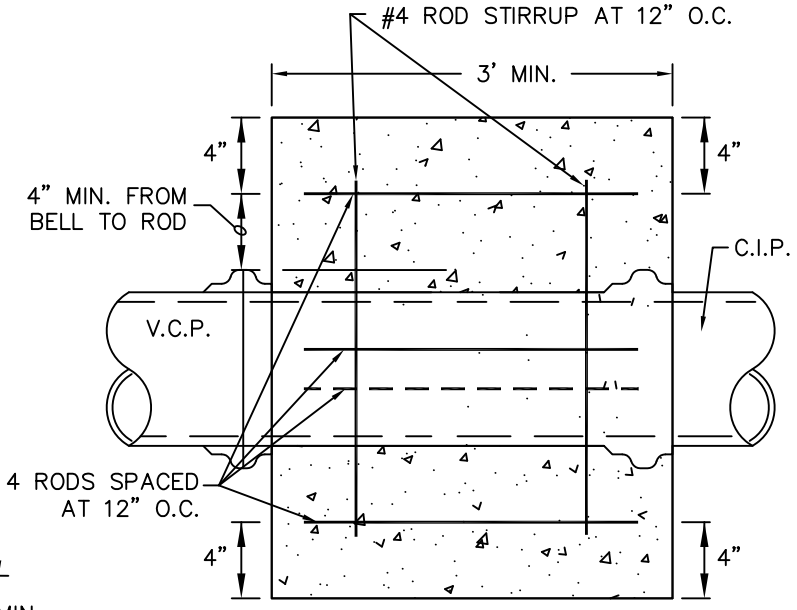

FOR 8" PIPE A V.C.P.-C.I.P. "ADAPTER" FERNCO COUPLING OR EQUAL

EXISTING V.C.P.-C.I.P. JUNCTION ENCASEMENT

DEPARTMENT OF PUBLIC WORKS SPRINGFIELD, MO.	BEDDING STANDARDS	ADOPTED: 11-6-2012 SAN-12

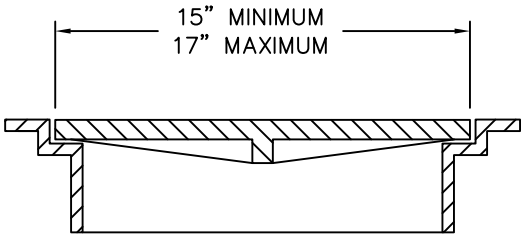

MINIMUM WEIGHT 90 lbs.
NEENAH R-1976 OR EQUAL

RING & COVER DETAIL

NOTE: LAMPHOLES MAY NOT BE USED WHERE VEHICULAR TRAFFIC IS INVOLVED OR WITHIN RIGHT-OF-WAY.

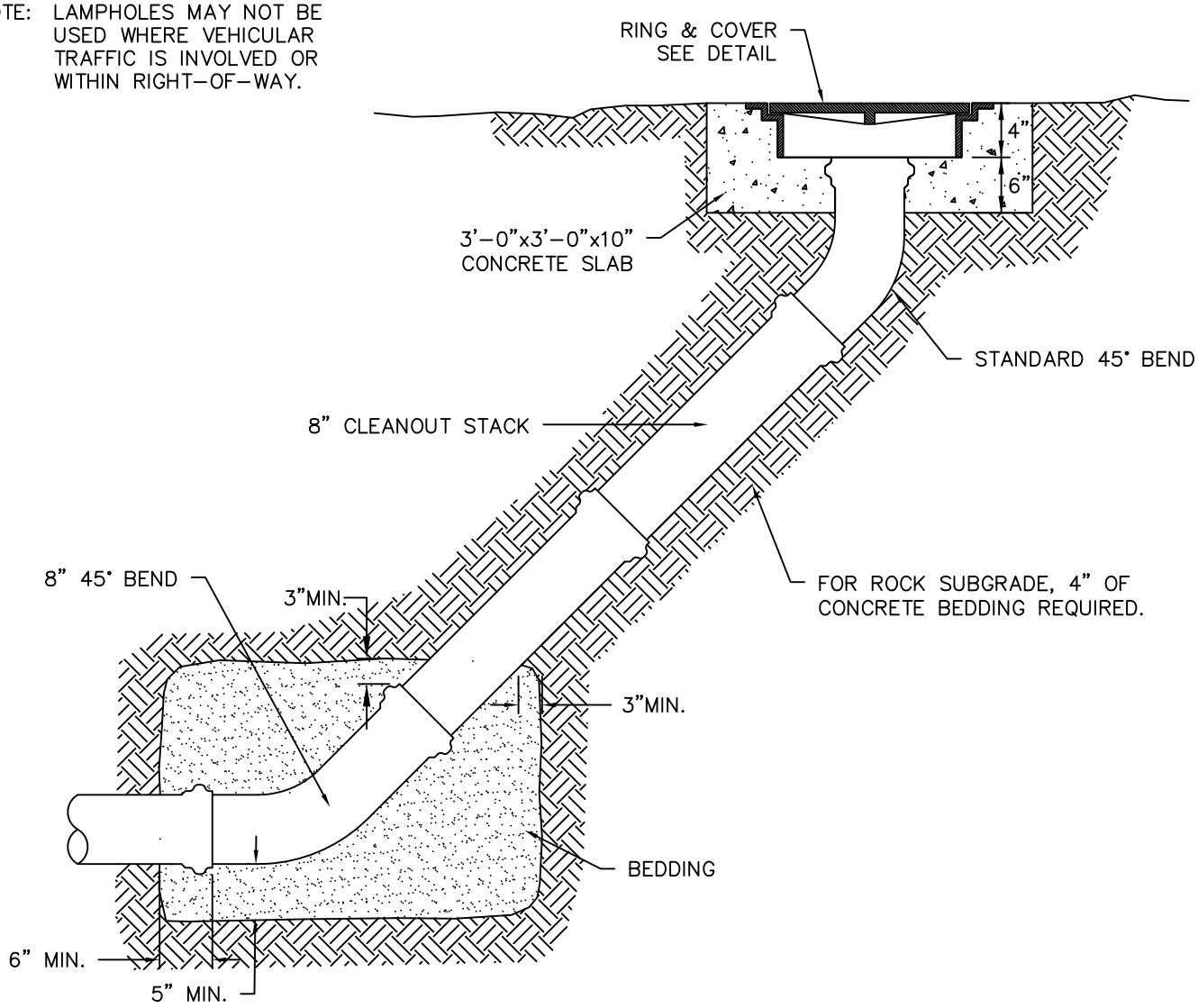

STANDARD CLEANOUT LAMPHOLE

DEPARTMENT OF PUBLIC WORKS SPRINGFIELD, MO.	LAMPHOLES	ADOPTED: 11-6-2012 SAN-13

NOTES:

1) MINIMUM 1% DESIGN SLOPE ON CASING AND CARRIER PIPES
2) IF PVC IS NOT TO BE USED AS CARRIER PIPE, CONTRACTOR SHALL SUBMIT A DESIGN FOR APPROVAL PRIOR TO CONSTRUCTION
3) RUBBER END SEAL, WITH STAINLESS STEEL BANDS, TO BE INSTALLED AT BOTH ENDS OF CASING PIPE
4) END ELEVATIONS AND SLOPE OF CASING PIPE TO BE FIELD VERIFIED PRIOR TO ACCEPTANCE
5) MIN. WALL THICKNESS 0.25"

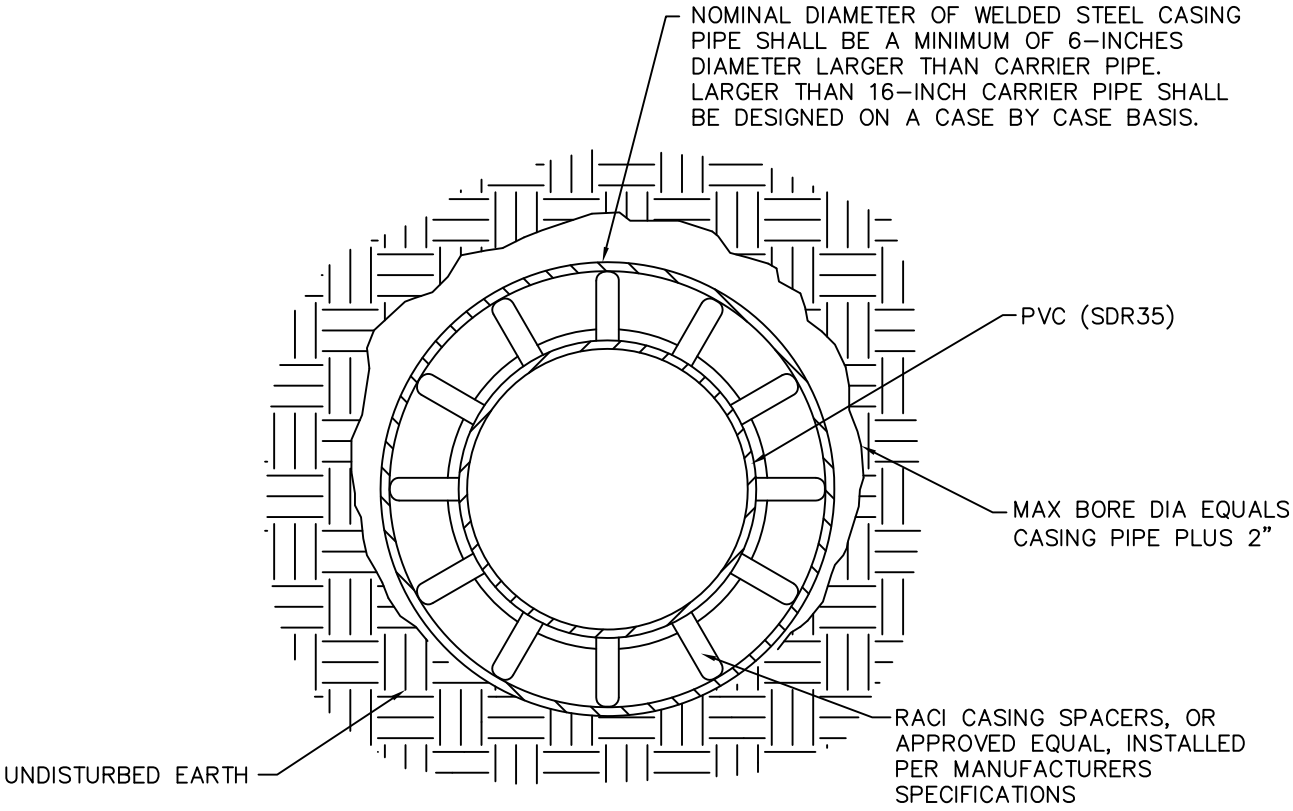

BORING CASING

TREATMENT FOR 8" SEWER, OTHER SIZES TO BE SIMILAR, APPROVAL WILL BE REQUIRED.

DEPARTMENT OF PUBLIC WORKS SPRINGFIELD, MO.	BORING DETAILS	ADOPTED: 11-6-2012 SAN-15

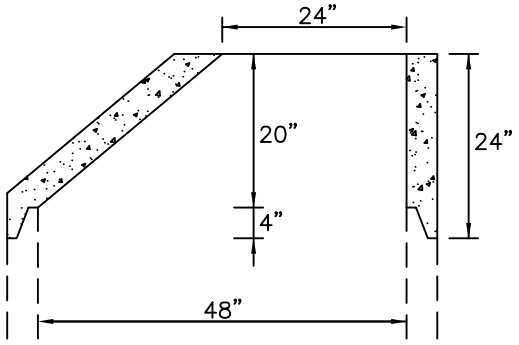

24” CONE

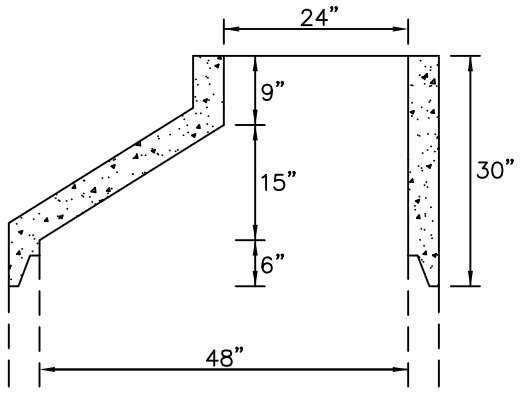

30” CONE

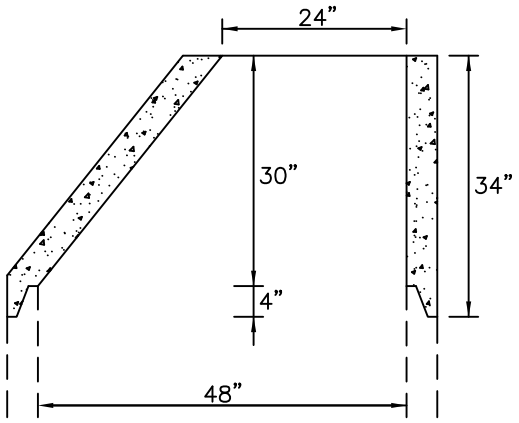

34” CONE

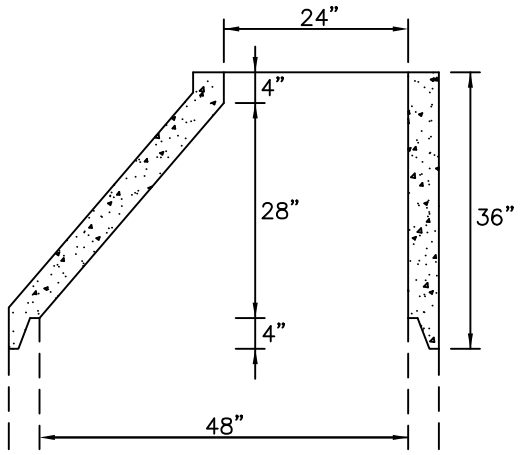

36” CONE

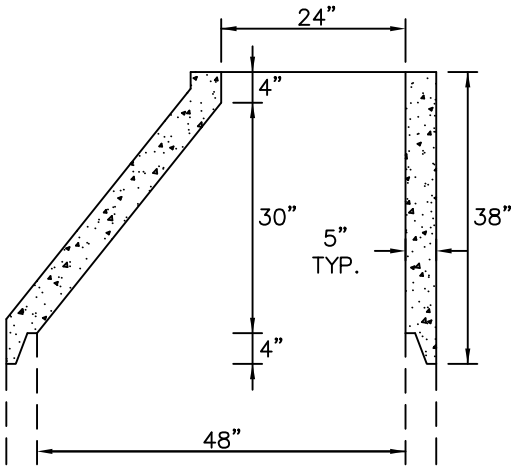

38” CONE

NOTE: WALL THICKNESS 5” TYP.

DEPARTMENT OF PUBLIC WORKS SPRINGFIELD, MO.	STANDARD CONE CONFIGURATION FOR MANHOLES	ADOPTED: 11–6–2012 SAN–16

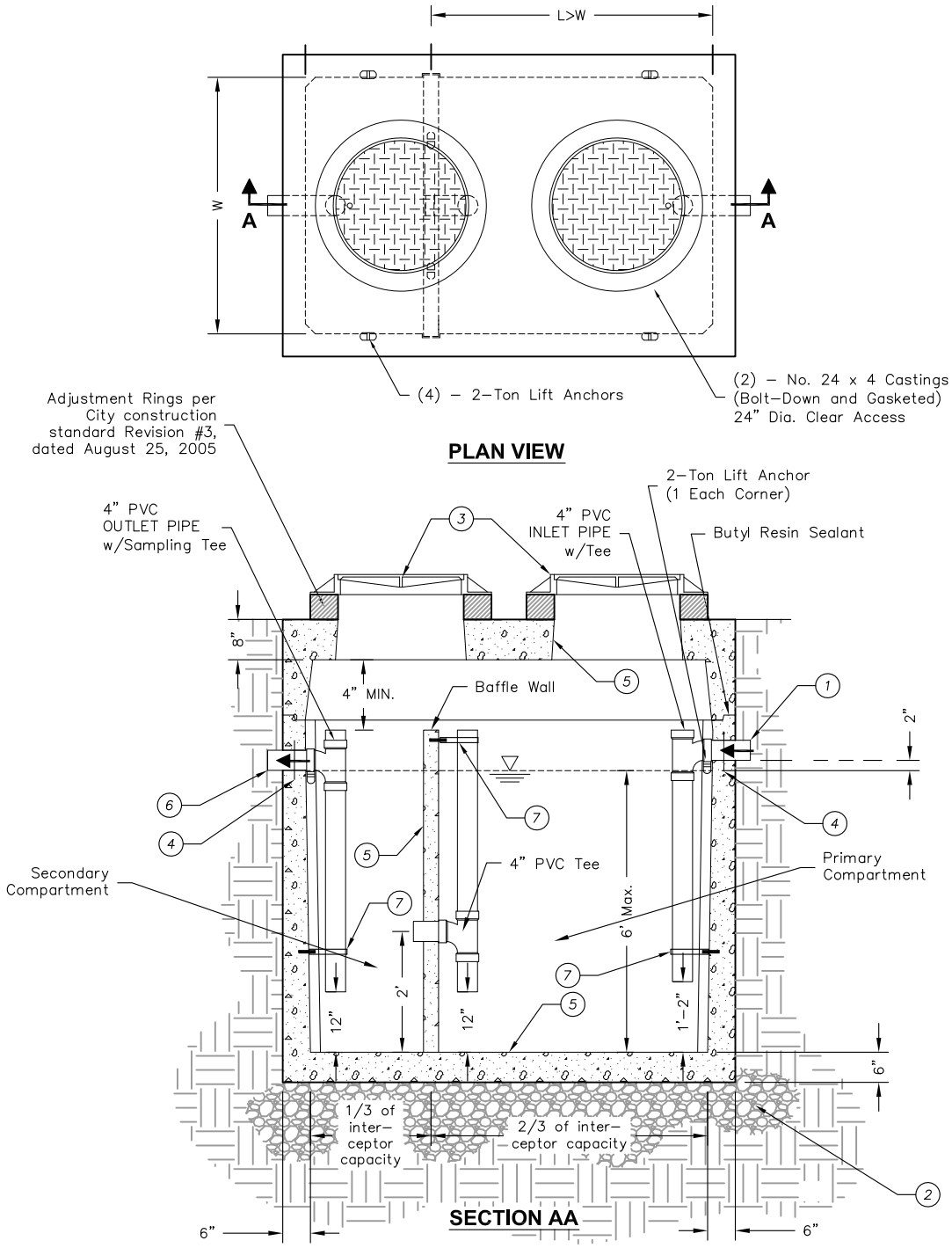

Notes:
–To be constructed in accordance with ASTM C 890 for AASHTO HS20–44 vehicle loading.
–Tank & all appurtenances to be fabricated and assembled at plant. Field fabrication not allowed.
–Manufacturer must be city certified and approved bi–annually. Contact Environmental Services at (417)864–1923 for inspection & certification.
–Not maintained by Environmental Services.
–to be sized in accordance with sizing form.

Keynotes	
1	4"–6" Inlet Pipe, w/female connection
2	4"–6" Sand or Gravel Backfill
3	Water–tight gasketed Heavy Duty Cast Iron Covering
4	A–LOK water–tight gasket(or equal) – cast in place
5	Sherwin–Williams Tank Clad HS Corrosion resistant epoxy coating(or approved equal)–all interior surfaces
6	4"–6" Outlet Pipe w/female connection
7	Cast–in–place stainless steel all–thread with stainless steel Cooper B3149 pipe hangers or equal.

DEPARTMENT OF PUBLIC WORKS SPRINGFIELD, MO.	PRECAST CONCRETE GREASE INTERCEPTOR	ADOPTED:11–13–2012 SAN–18

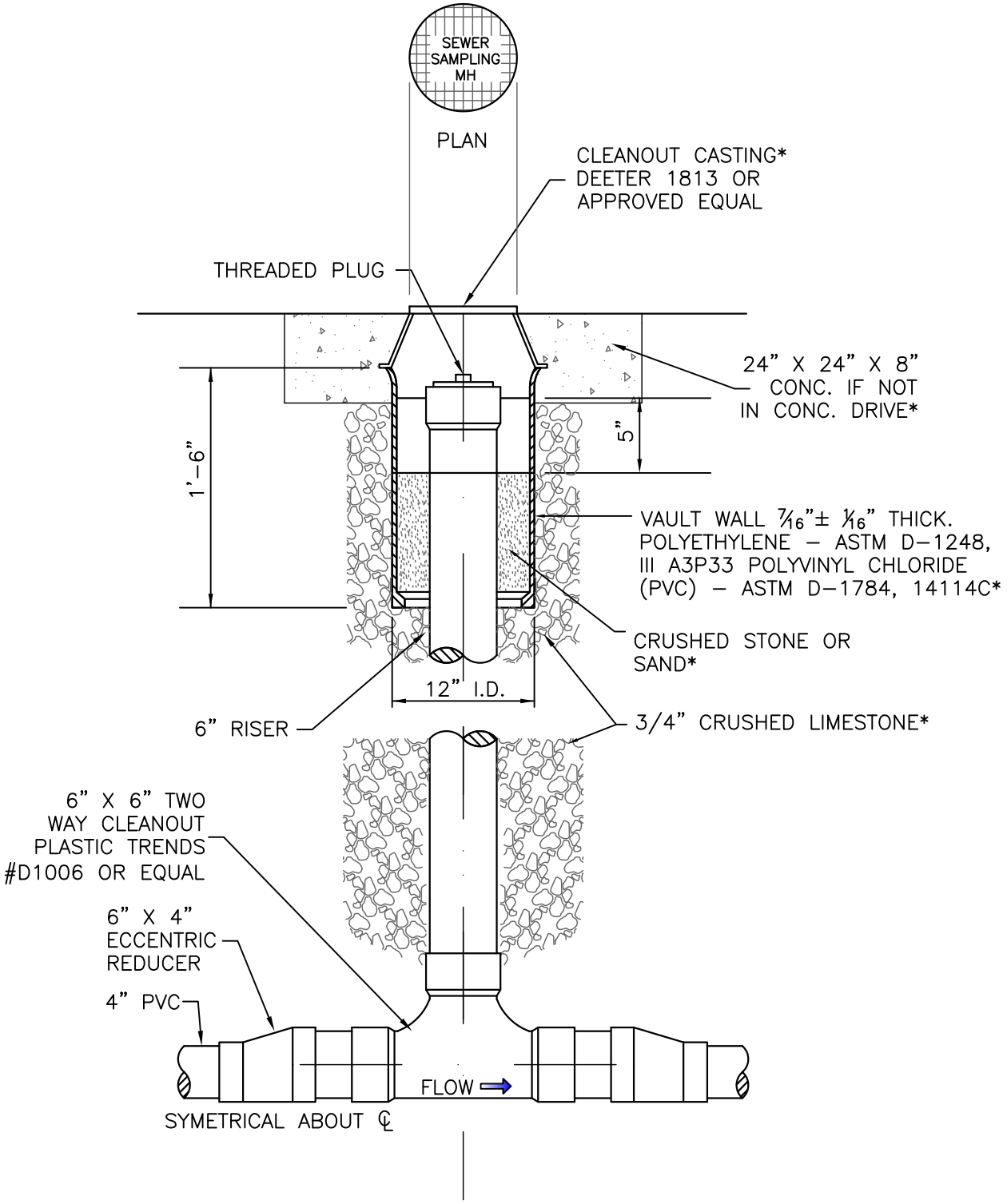

*Not required if located indoors on sites where no outside location is available.
–Not maintained by Environmental Services

DEPARTMENT OF PUBLIC WORKS SPRINGFIELD, MO.	SAMPLING MANHOLE	ADOPTED: 10-30-2012 SAN-19

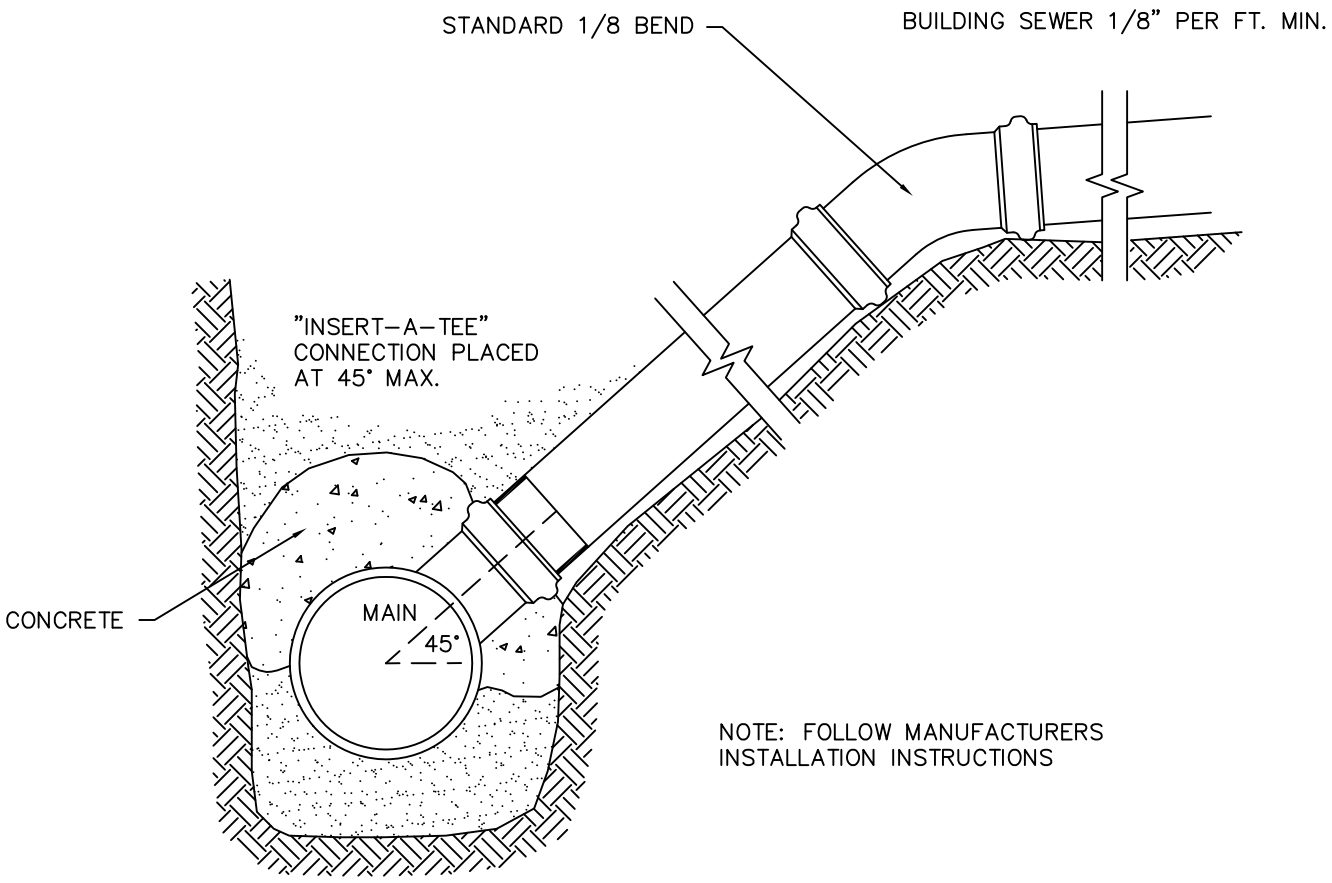

DEPARTMENT OF PUBLIC WORKS SPRINGFIELD, MO.	INSERT-A-TEE TAPS	ADOPTED: 11-6-2012 SAN-20

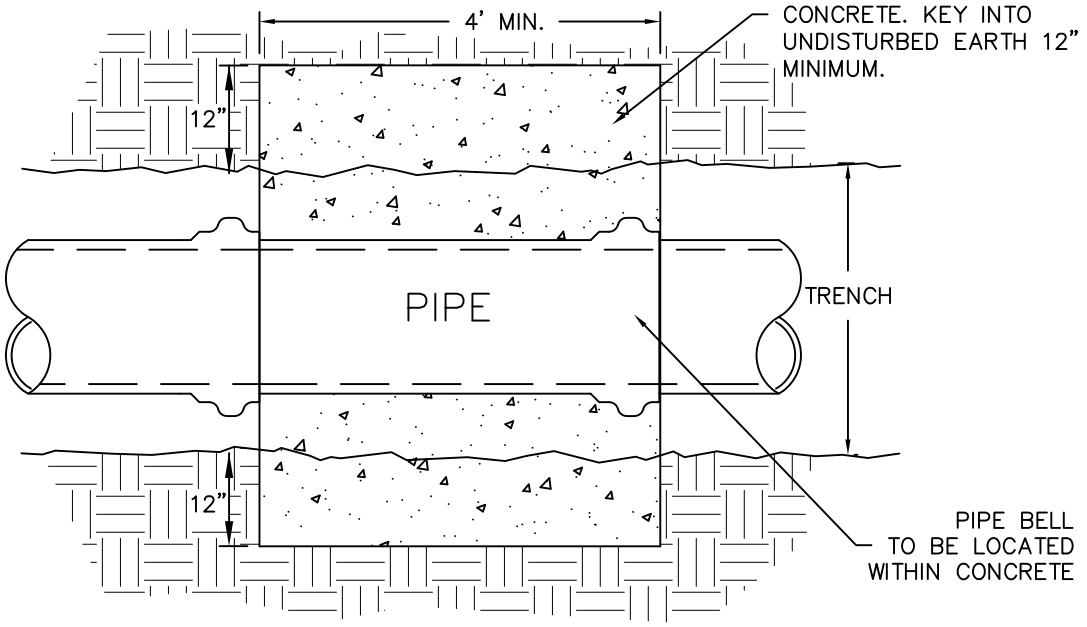

TOP VIEW

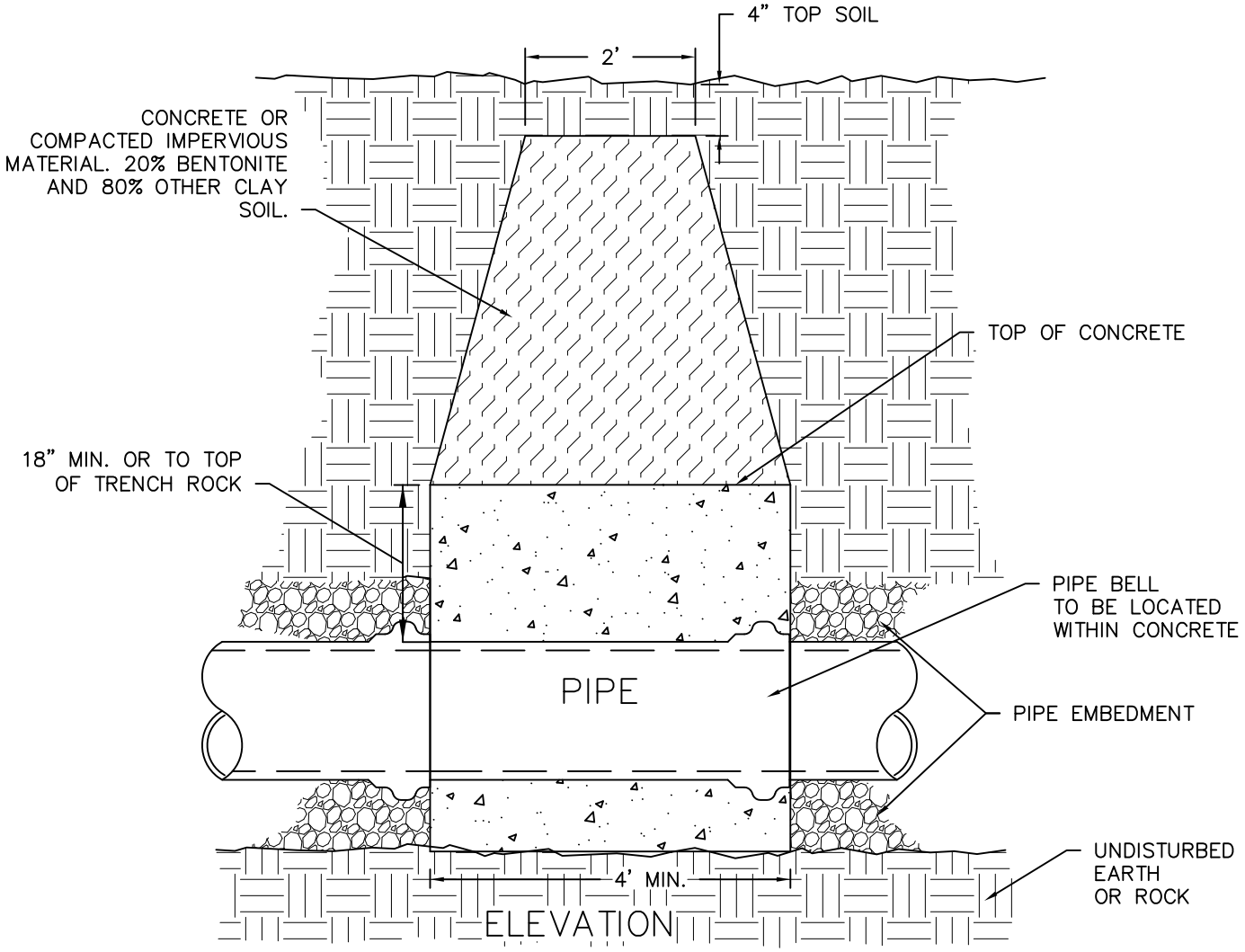

ELEVATION

DEPARTMENT OF PUBLIC WORKS SPRINGFIELD, MO.	IMPERVIOUS TRENCH SEAL	ADOPTED: 11-6-2012 SAN-21

NOTE:

USE CONCRETE HOLE CUTTER TO CUT CONCRETE MANHOLE WALL $\frac{1}{2}$" LARGER THAN O.D. OF PIPE. CUT FLEXIBLE LINER BY HAND.

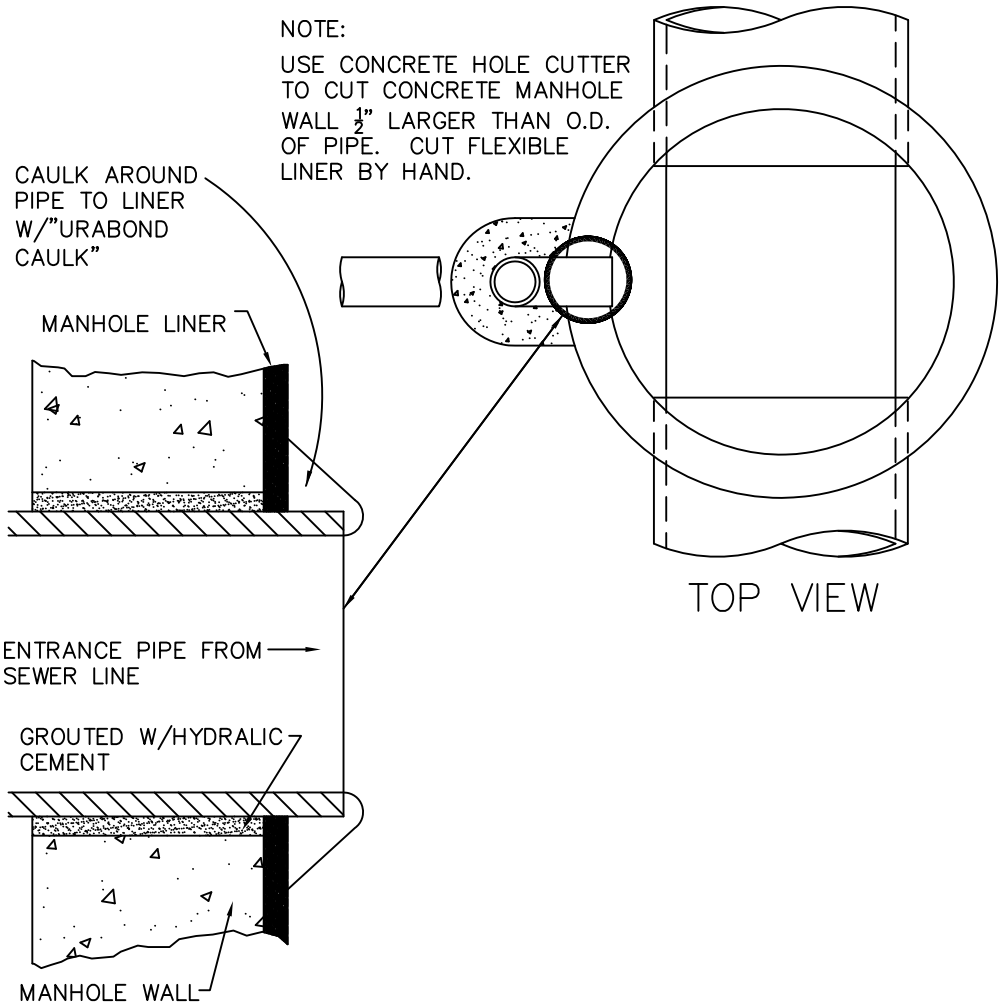

ENLARGED PIPE ENTRANCE

IT SHALL BE THE CONTRACTOR'S RESPONSIBILITY TO REPAIR ANY DAMAGE TO PLASTIC LINER.

NOTE:

"URABOND CAULK" MFG. BY
POLYRESINS
P.O. BOX 158
SUN VALLEY, CA 91352

DEPARTMENT OF PUBLIC WORKS SPRINGFIELD, MO.	CONNECTION TO LINED MANHOLES	ADOPTED: 11-6-2012 SAN-22

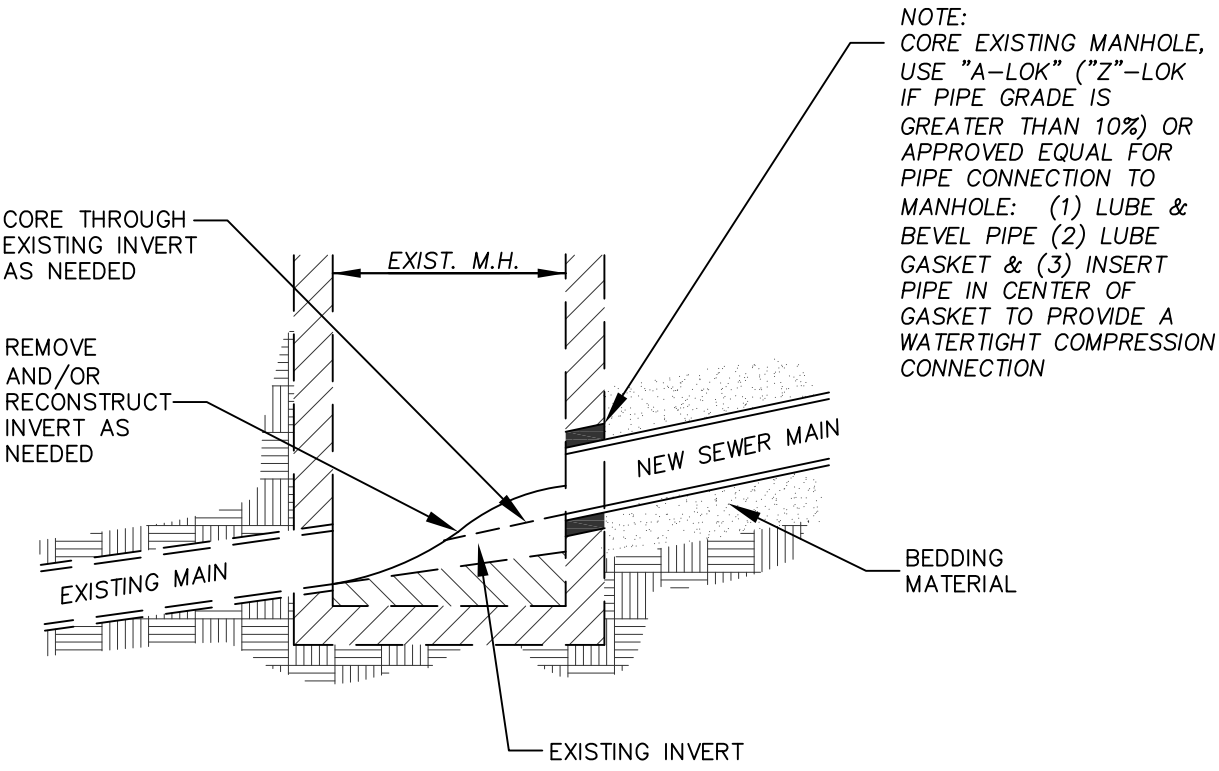

DEPARTMENT OF PUBLIC WORKS SPRINGFIELD, MO.	CONNECTION TO EXISTING MANHOLES	ADOPTED: 11-15-2012 SAN-23

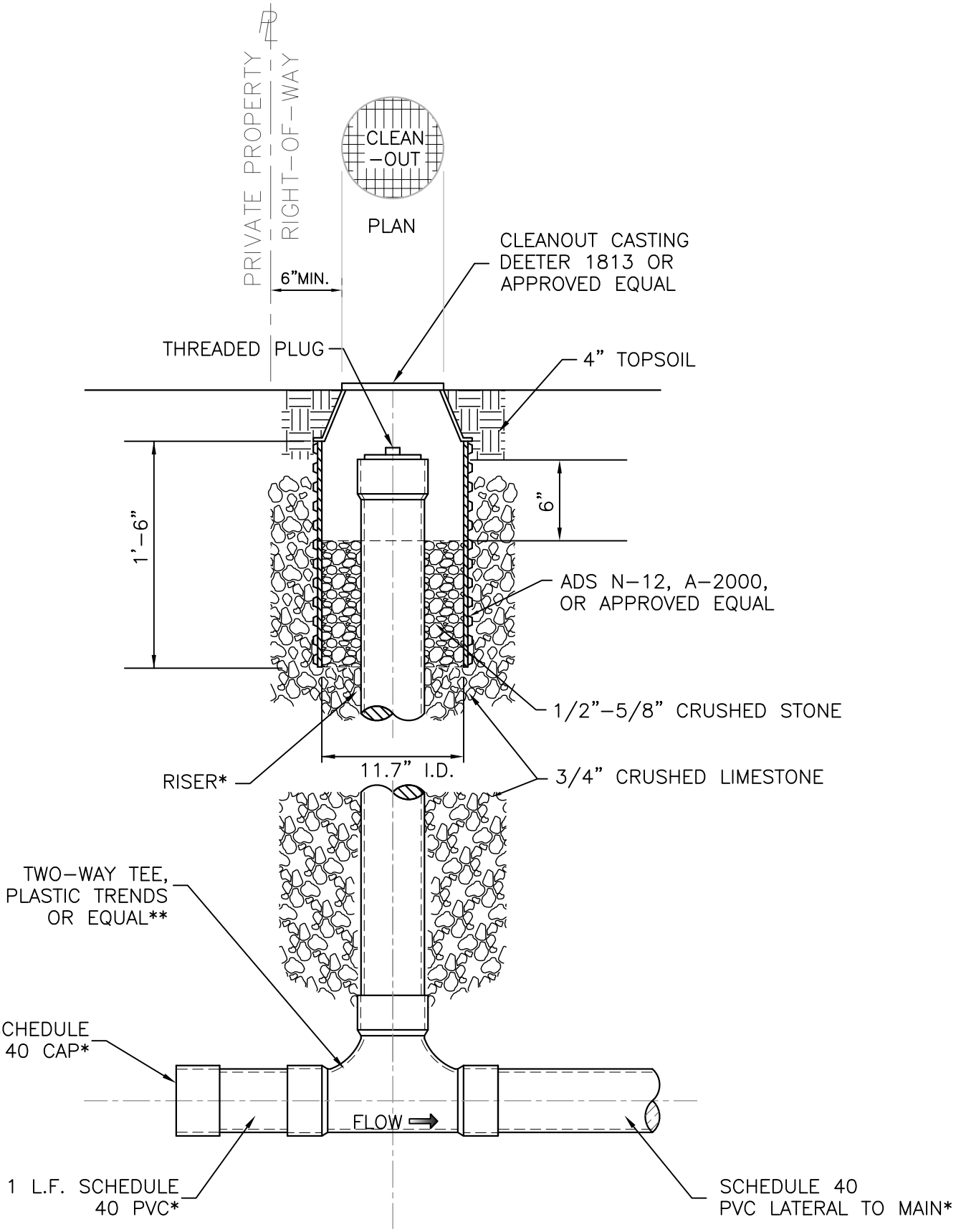

NOTES:
-NOT MAINTAINED BY ENVIRONMENTAL SERVICES.
-ADJUST LATERAL DEPTH AS NECESSARY TO AVOID UTILITY CONFLICT.
-RISER TO BE LOCATED A MIN. OF 6" INSIDE RIGHT-OF-WAY.
* 4" OR 6" SCHEDULE 40 PVC.
** 4"X4" NO. #D1004; 6"X6" NO. #D1006 BY PLASTIC TRENDS.

DEPARTMENT OF PUBLIC WORKS SPRINGFIELD, MO.	TYPICAL CLEANOUT RISER	ADOPTED: 7-1-2015 SAN-24

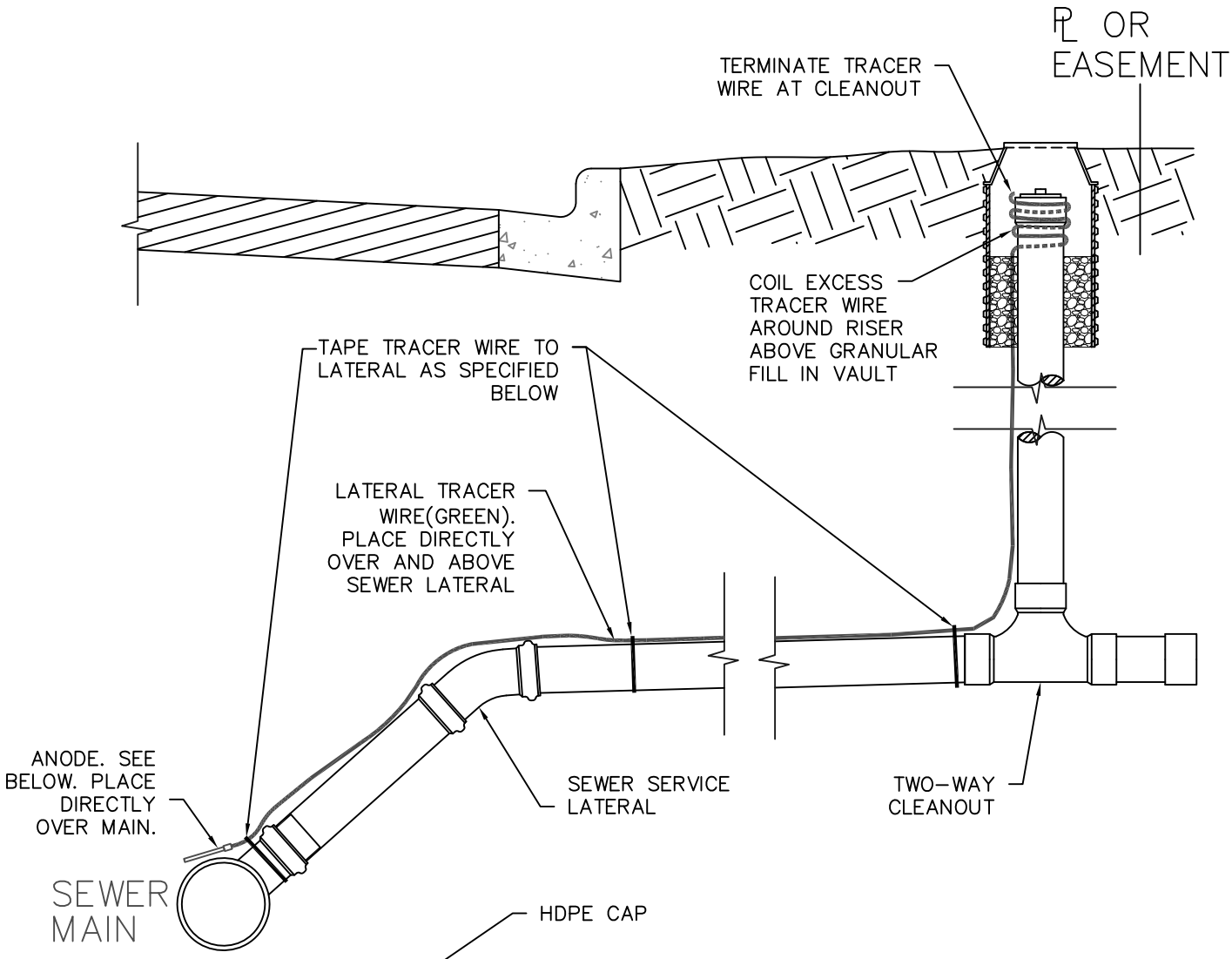

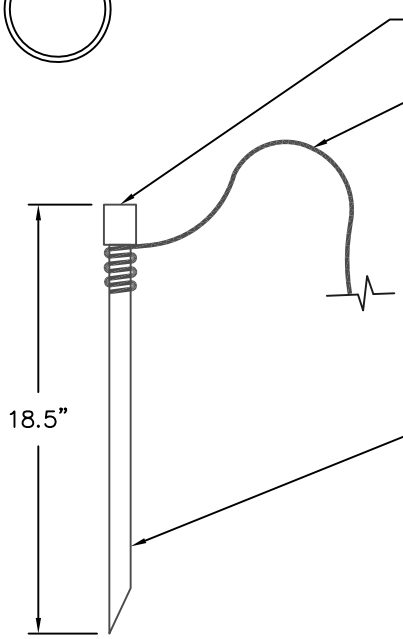

WIRE

THE LOCATOR WIRE SHALL BE GREEN NO. 12 AWG COPPER CLAD STEEL(CCS). TO ALLOW FOR GRADE ADJUSTMENT, A MINIMUM OF 12"OF EXCESS WIRE SHALL BE COILED AT THE CLEANOUT FOR ALL WIRES.

ANODES

THE ANODE SHALL BE ½ LB BARE ZINC OR MAGNESIUM. THE ANODES SHALL BE BURIED AT THE SAME ELEVATION AND IN CLOSE PROXIMITY TO THE SEWER LATERAL. THE ANODES SHALL BE CONNECTED TO THE GREEN NO. 12 AWG COPPER CLAD STEEL(CCS) WIRE. 1.315"Ø

TRACER WIRE DETAIL

CONDUCTIVE TYPE PIPE LOCATOR/TRACER WIRE SHALL BE INSTALLED TO LOCATE ALL SEWER LATERALS. THE WIRE SHALL EXTEND THE ENTIRE LENGTH OF THE PROPOSED LATERAL. THE WIRE SHALL BE INSTALLED DIRECTLY ON TOP THE PIPE AND SECURED TO THE LATERAL BY TAPE AT BASE OF RISER, SEWER MAIN AND EVERY 15'. CORROSION PROOF/FILLED WIRE CONNECTORS SHALL BE USED AT SPLICE LOCATIONS. ELECTRICAL TAPE SHALL BE USED AND NO BARE WIRE SHALL BE EXPOSED. TEST STATIONS SHALL BE INSTALLED INSIDE ALL CLEANOUT VAULTS AND EXISTING WIRES SHALL BE CONNECTED. ZINC OR MAGNESIUM ANODES SHALL BE ATTACHED AT BOTH THE BEGINNING AND THE END OF THE TRACER WIRE. A TYPICAL LAYOUT OF THE LOCATOR WIRE AND CLEANOUT IS PROVIDED IN THE FIGURE ABOVE. CONDUCTIVITY TO BE TESTED BEFORE ACCEPTANCE.

DEPARTMENT OF PUBLIC WORKS SPRINGFIELD, MO.	TRACER WIRE DETAIL	ADOPTED: 7-1-2015 SAN-25

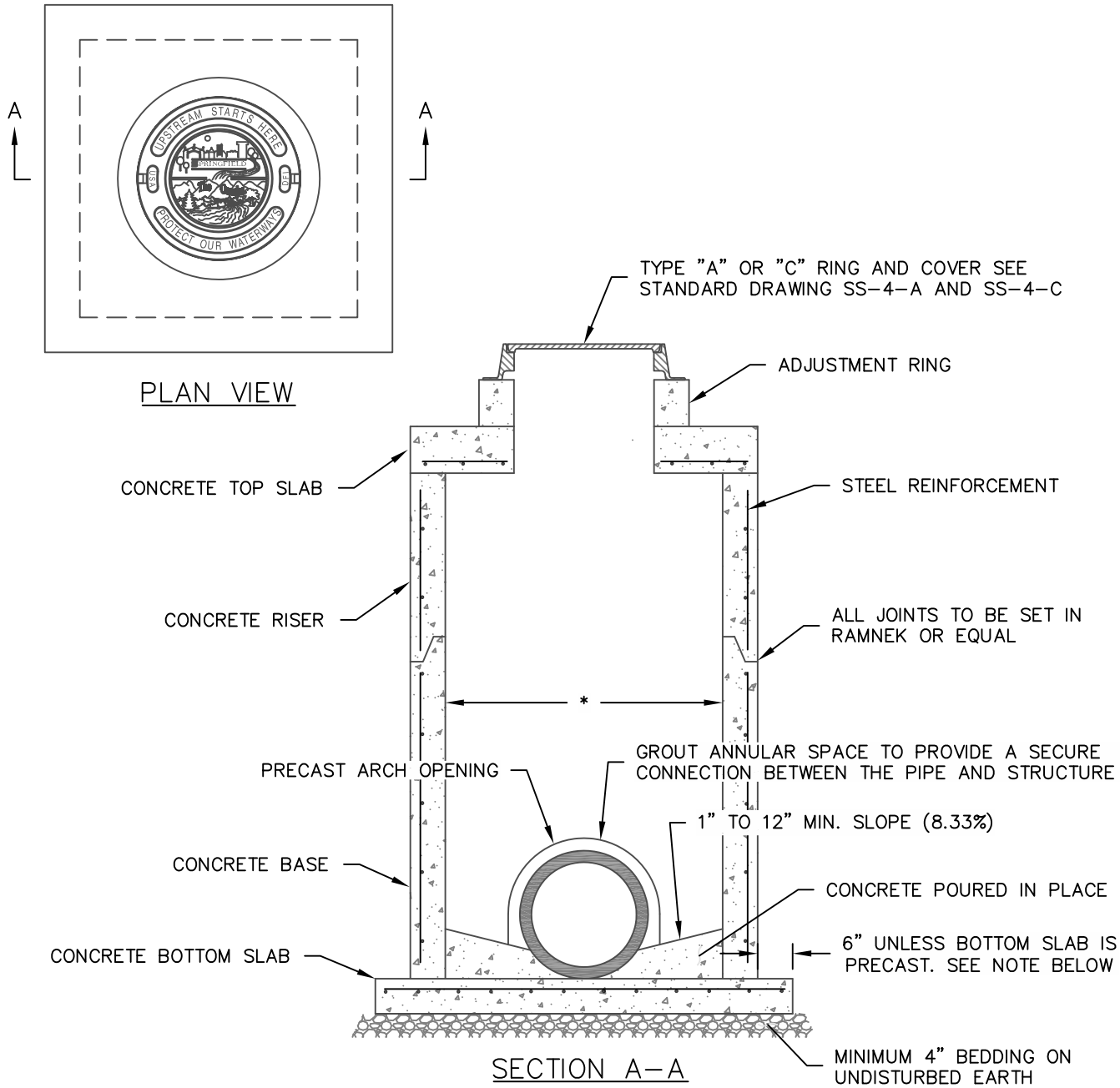

NOTES:

1. JUNCTION BOX SHALL BE DESIGNED AND MANUFACTURED IN ACCORDANCE WITH ASTM C 913.
2. CONCRETE TOP SLAB SHALL BE DESIGNED TO WITHSTAND LOADING BASED ON A COMBINATION OF DEAD LOADS, SNOW LOADS, AND A-16 (HS20-44) TRAFFIC LOADS IN ACCORDANCE WITH ASTM C890.
3. BOTTOM SLAB SHALL BE POURED IN PLACE. IF MANUFACTURER IS CONCERNED ABOUT STRUCTURAL INTEGRITY OF BASE DURING TRANSPORTATION THEN THE BOTTOM SLAB MAY BE PRECAST WITH RISER.
4. PIPE TO BE ON GRADE BEFORE BOTTOM SLAB IS CONSTRUCTED UNLESS BOTTOM IS PRECAST WITH BASE.
5. ALL PIPES SHALL FIT FLUSH WITH INSIDE FACE OF JUNCTION BOX.
6. BOTTOM OF JUNCTION BOX TO BE FILLED WITH CONCRETE FORMING CHANNELS TOWARD OUTLET PIPE FROM ALL INLET PIPES. CONCRETE SHALL BE FLUSH WITH INVERT OF OUTLET PIPE.
7. NO MORE THAN 2 ADJUSTMENT RINGS MAY BE USED BUT SHALL NOT EXCEED 18 INCHES.
8. CONCRETE TOP SLAB SHALL BE PINNED TO STRUCTURE AT THE CORNERS USING ONE #4 DEFORMED BAR IN EACH CORNER. BAR SHALL EXTEND A MINIMUM OF 6 INCHES INTO RISER BELOW.

PIPE DIAMETER	*MINIMUM INSIDE DIMENSION OF STRUCTURE
15" – 24"	THREE FEET (3')
27" – 30"	FOUR FEET (4')
36" – 42"	FIVE FEET (5')
48" – 54"	SIX FEET (6')

DEPARTMENT OF PUBLIC WORKS SPRINGFIELD, MO.	JUNCTION BOX	ADOPTED: 7-1-15 SS-1

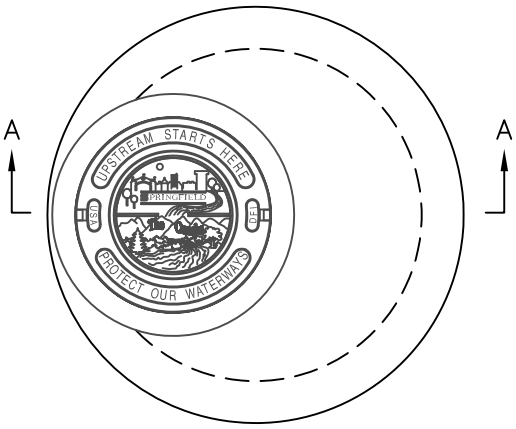

PLAN VIEW

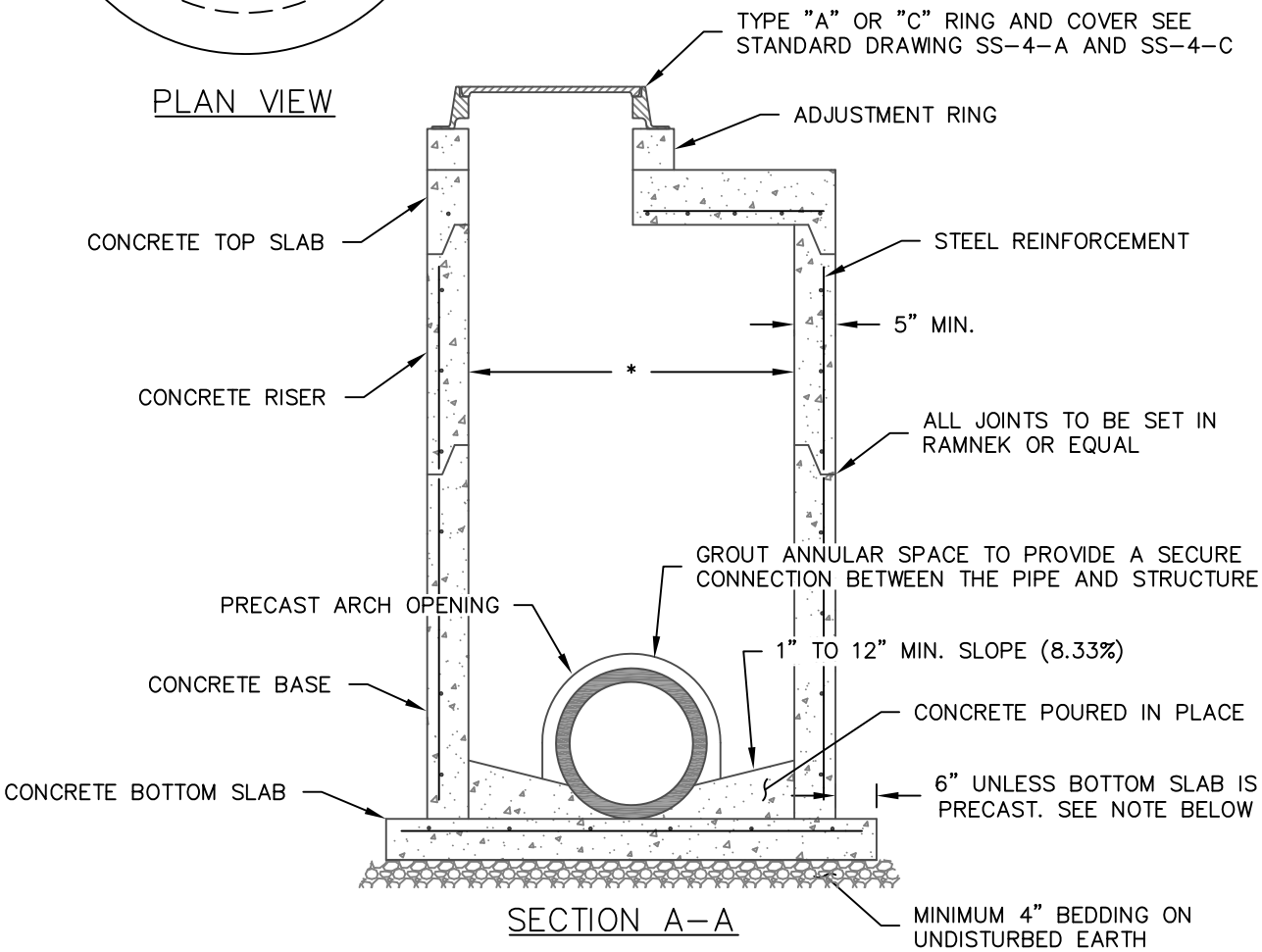

SECTION A–A

NOTES:
1. MANHOLE SHALL BE DESIGNED AND MANUFACTURED IN ACCORDANCE WITH ASTM C 478.
2. BOTTOM SLAB SHALL BE POURED IN PLACE. IF MANUFACTURER IS CONCERNED ABOUT STRUCTURAL INTEGRITY OF CONCRETE BASE DURING TRANSPORTATION THEN THE BOTTOM SLAB MAY BE PRECAST WITH CONCRETE BASE.
3. PIPE TO BE ON GRADE BEFORE BOTTOM SLAB IS CONSTRUCTED.
4. ALL PIPES SHALL FIT FLUSH AT SPRINGLINE WITH INSIDE FACE OF MANHOLE.
5. BOTTOM OF MANHOLE TO BE FILLED WITH CONCRETE FORMING CHANNELS TOWARD OUTLET PIPE FROM ALL INLET PIPES. CONCRETE SHALL BE FLUSH WITH INVERT OF OUTLET PIPE.
6. NO MORE THAN 2 ADJUSTMENT RINGS MAY BE USED AND SHALL NOT EXCEED 18 INCHES.
7. A MINIMUM CLEARANCE OF TWO FEET, MEASURED AT THE INSIDE FACE OF THE MANHOLE SHALL BE MAINTAINED BETWEEN THE OUTSIDE EDGE OF STORM SEWER PIPES..

PIPE DIAMETER	*MINIMUM INSIDE DIAMETER OF MANHOLE (SEE NOTE 7)
15" – 24"	FOUR FEET (4')
27" – 42"	FIVE FEET (5')
48"	SIX FEET (6')
54" – 66"	EIGHT FEET (8')

DEPARTMENT OF PUBLIC WORKS SPRINGFIELD, MO.	STORM SEWER MANHOLE	ADOPTED: 1–1–15 SS–2

PRECAST TOPS

REQUIRED DIMENSIONS

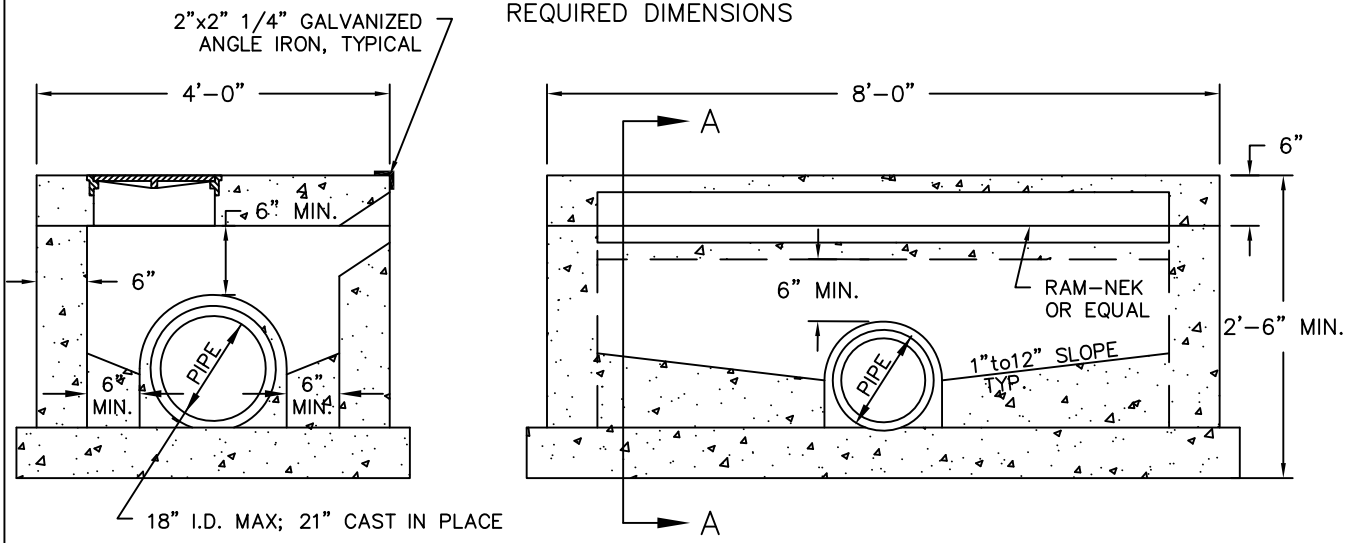

SECT. A-A

FOR 6" PRECAST TOP

NOTE: #4Ø AT 10" O.C. (ALL WALLS, VERT. & HORZ.)
SEE SS-8 FOR TOP SLAB REINFORCEMENT.

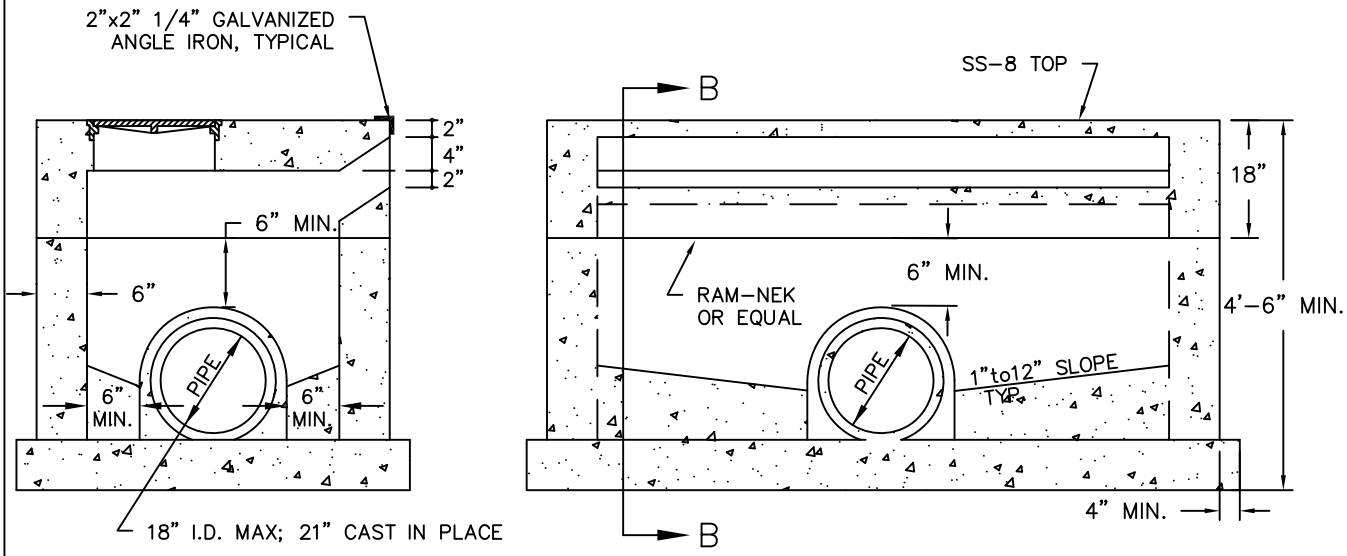

SECT. B-B

FOR SS-8 TOP (18" PRECAST TOP)

NOTES:
1. BOTTOM TO BE POURED IN PLACE
2. PIPE TO BE ON GRADE BEFORE BOTTOM IS CONSTRUCTED.
3. FOR 6" TOP, USE 4 - #4Ø DOWELS: ONE IN EACH CORNER WITH RAM-NEK OR EQUAL.
4. RAM-NEK ALL JOINTS (OR EQUAL).
5. 6" INVERT REQUIRED TO PREVENT SEDIMENTATION.
6. THERE MUST BE A 6" MIN. CONCRETE SEGMENT ABOVE PRECAST OPENING.
7. IF CLEARANCE CAN'T BE PROVIDED FROM TOP AND SIDES OF PIPE, A MODIFIED INLET MUST BE USED.

DEPARTMENT OF PUBLIC WORKS SPRINGFIELD, MO.	NON-RECESSED CURB INLET	ADOPTED: 7-1-15 SS-3

RING & COVER DETAILS

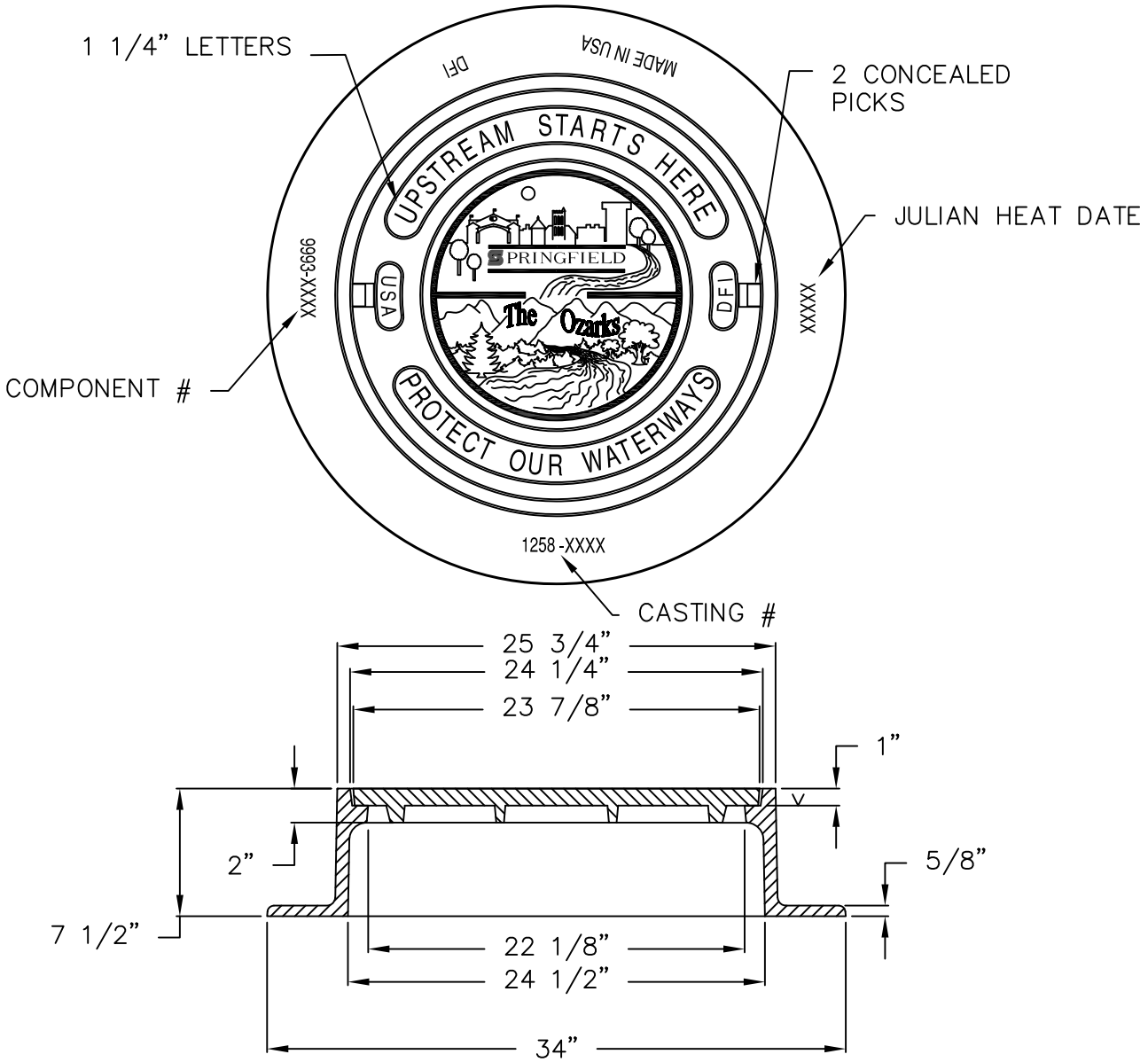

NOTE:
1. FURNISHED WITH MACHINED HORIZONTAL BEARING SURFACES.

TYPE "A" RING & COVER

DEETER # 1258 RING & COVER, EAST JORDAN IRON WORKS #2420Z RING W/2408A COVER, SS-4-C INSTALLED FLANGE DOWN OR EQUAL

DEPARTMENT OF PUBLIC WORKS SPRINGFIELD, MO.	RING & COVER FOR STORM SEWER INLET	ADOPTED: 7-1-07 SS-4-A

RING & COVER DETAILS

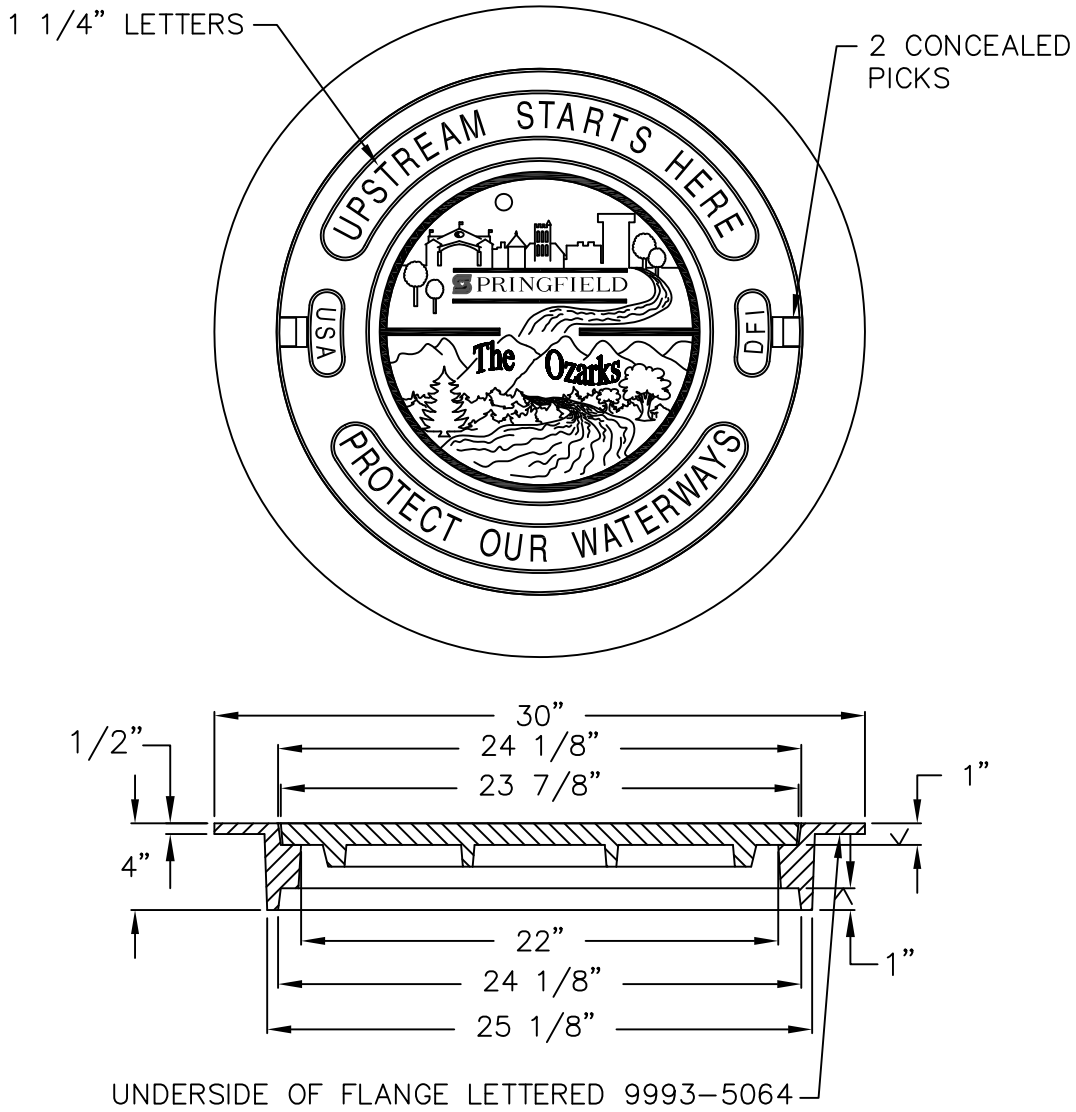

NOTE:

1. FURNISHED WITH MACHINED HORIZONTAL BEARING SURFACE.
2. RING IS REVERSIBLE AND CAN BE INSTALLED WITH FLANGE UP OR DOWN.

TYPE "C" RING & COVER FOR STORM SEWERS

DEETER # 1157 RING W/ #2018-A COVER, EAST JORDAN IRON WORKS #2425Z RING W/2408A COVER OR EQUAL

DEPARTMENT OF PUBLIC WORKS SPRINGFIELD, MO.	RING & COVER FOR STORM SEWER INLET	ADOPTED: 7-1-07 SS-4-C

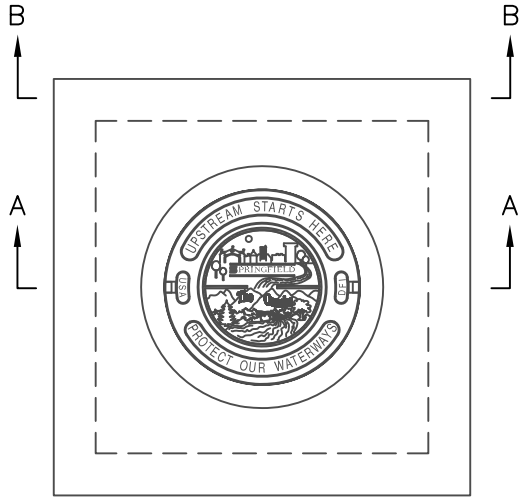

PLAN VIEW

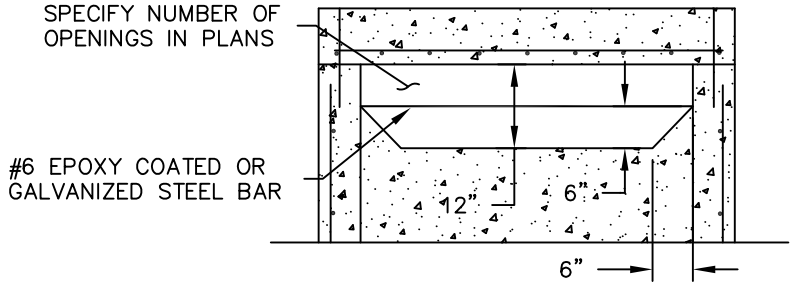

SECTION B–B

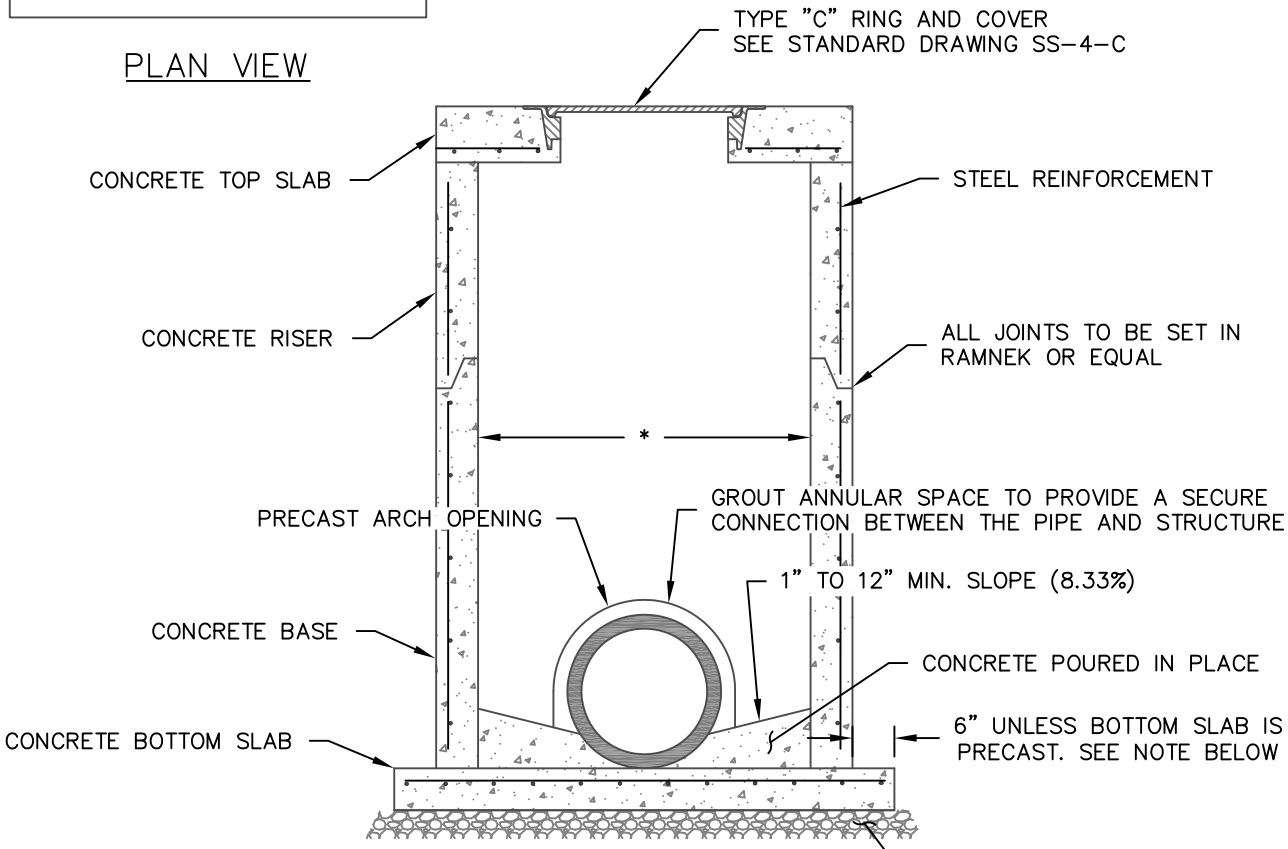

SECTION A–A

NOTES:

1. AREA INLET SHALL BE DESIGNED AND MANUFACTURED IN ACCORDANCE WITH ASTM C 913.
2. CONCRETE TOP SLAB SHALL BE DESIGNED TO WITHSTAND LOADING BASED ON A COMBINATION OF DEAD LOADS, SNOW LOADS, AND A–16 (HS20–44) TRAFFIC LOADS IN ACCORDANCE WITH ASTM C890.
3. BOTTOM SLAB SHALL BE POURED IN PLACE. IF MANUFACTURER IS CONCERNED ABOUT STRUCTURAL INTEGRITY OF CONCRETE BASE DURING TRANSPORTATION THEN THE BOTTOM SLAB MAY BE PRECAST WITH CONCRETE BASE.
4. PIPE TO BE ON GRADE BEFORE BOTTOM SLAB IS CONSTRUCTED UNLESS BOTTOM IS PRECAST WITH BASE.
5. ALL PIPES SHALL FIT FLUSH WITH INSIDE FACE OF INLET.
6. BOTTOM OF INLET TO BE FILLED WITH CONCRETE FORMING CHANNELS TOWARD OUTLET PIPE FROM ALL INLET PIPES. CONCRETE SHALL BE FLUSH WITH INVERT OF OUTLET PIPE.
7. CONCRETE TOP SLAB SHALL BE PINNED TO STRUCTURE AT THE CORNERS USING ONE #4 DEFORMED BAR IN EACH CORNER. BAR SHALL EXTEND A MINIMUM OF 6 INCHES INTO RISER BELOW.

PIPE DIAMETER	*MINIMUM INSIDE DIMENSION OF STRUCTURE
15" – 24"	THREE FEET (3')
27" – 30"	FOUR FEET (4')
36" – 42"	FIVE FEET (5')
48" – 54"	SIX FEET (6')

DEPARTMENT OF PUBLIC WORKS SPRINGFIELD, MO.	AREA INLET	ADOPTED: 1–1–15
		SS–5

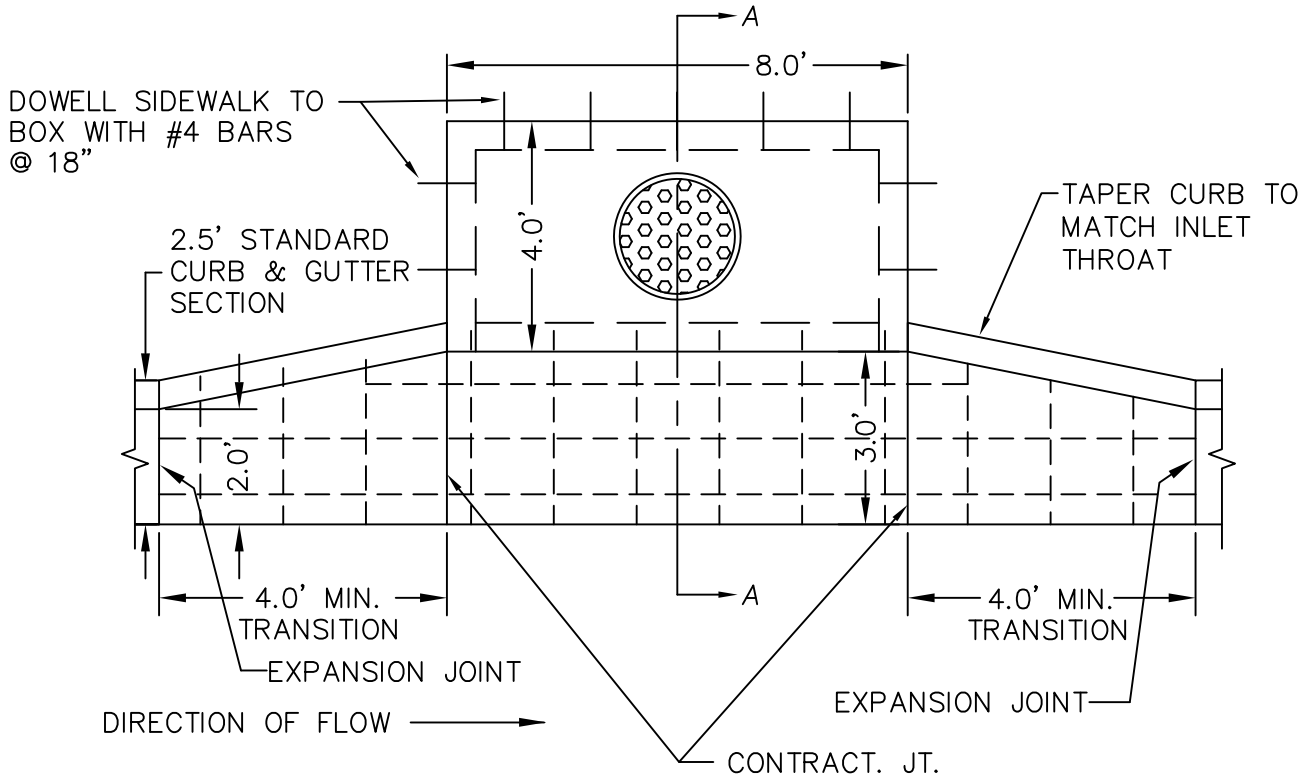

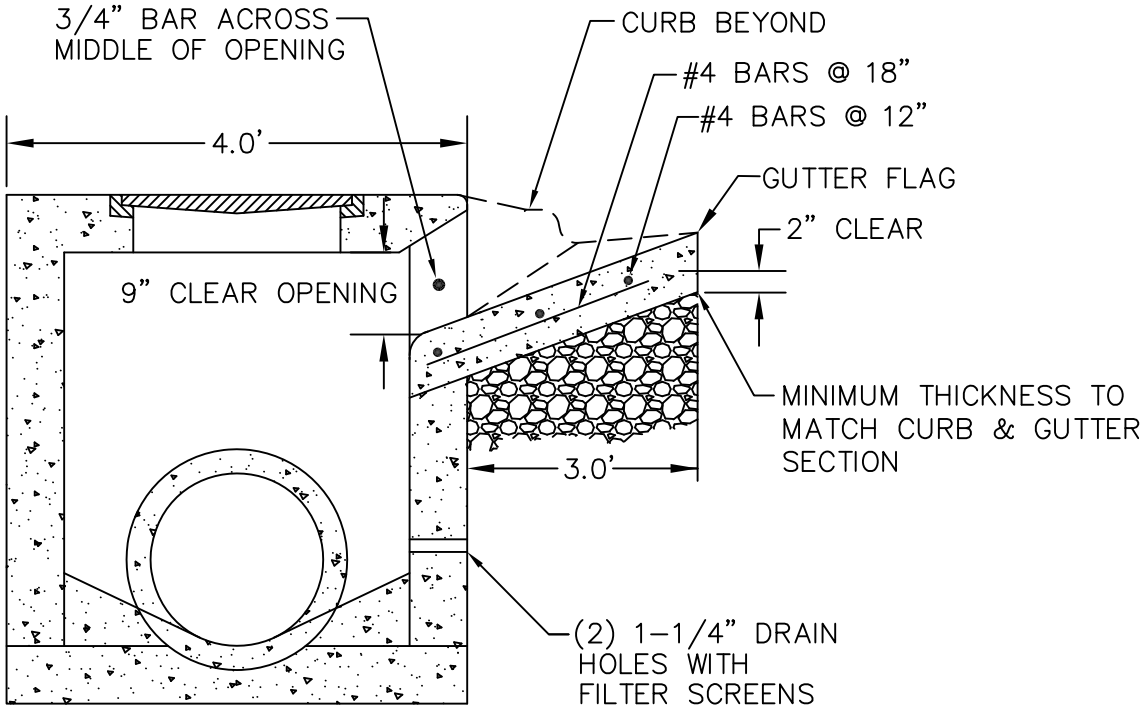

SECTION "A-A"

NOTE:

1. #4 BARS @ 10" O.C.(ALL WALLS, VERT. & HORIZ.)
2. IF CLEARANCE CAN'T BE PROVIDED FROM TOP AND SIDES OF PIPE, A MODIFIED INLET MUST BE USED.
3. 6", 12" OR 18" PRECAST LIDS MAY BE USED.
4. IF INLET IS NOT RECESSED, THROAT OPENING IS 7 INCHES.

DEPARTMENT OF PUBLIC WORKS SPRINGFIELD, MO.	CURB INLET	ADOPTED: 10-1-04
		SS-6

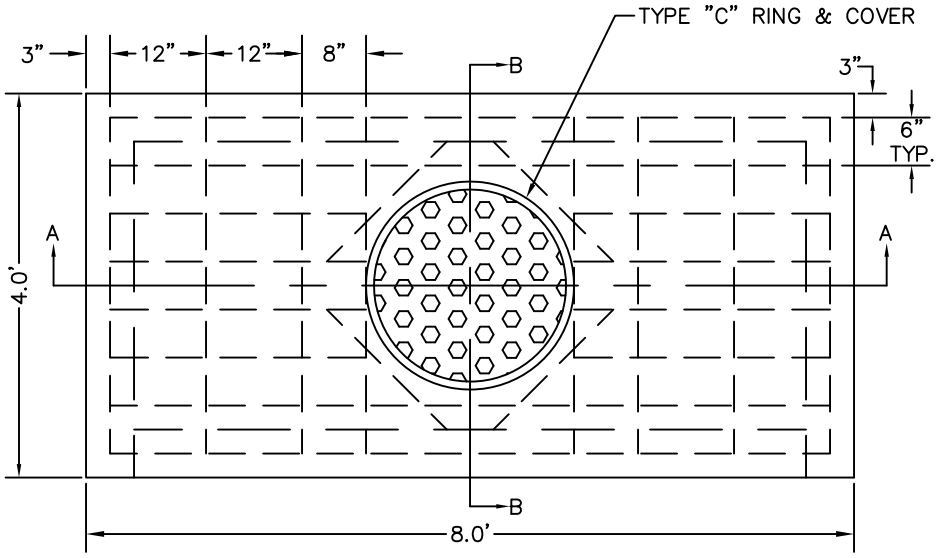

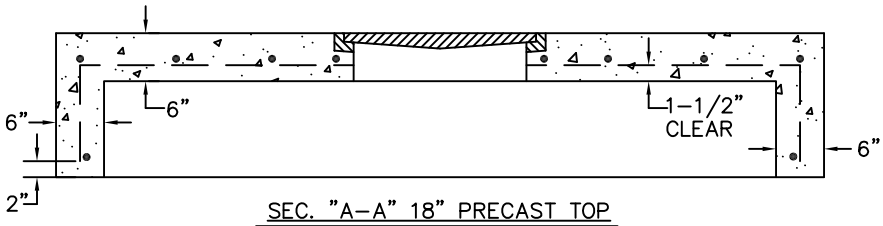

SEC. "A-A" 18" PRECAST TOP

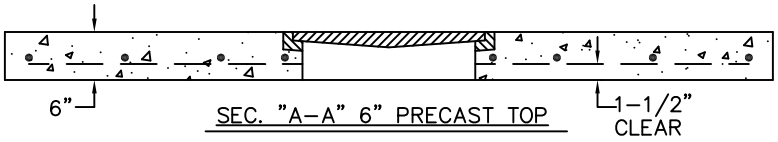

SEC. "A-A" 6" PRECAST TOP

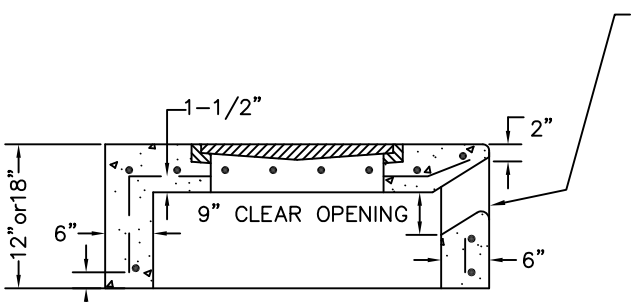

SEC. "B-B" 18" PRECAST TOP

NOTES:

1. REINFORCEMENT IS THE SAME IN THE TOP SLAB OF THE 6" AND THE 18" PRECAST TOP.

2. USE NO. 4 BAR THROUGHOUT.

3. 6" & 12" PRECAST TOPS TO BE PINNED AT 4 CORNERS.

4. IF INLET IS NOT RECESSED THAN A PROTECTIVE 2" x 2" x 1/4" GALVANIZED ANGLE IRON IS REQUIRED AS SHOWN.

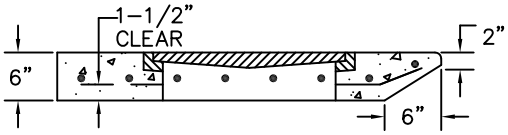

SEC. "B-B" 6" PRECAST TOP

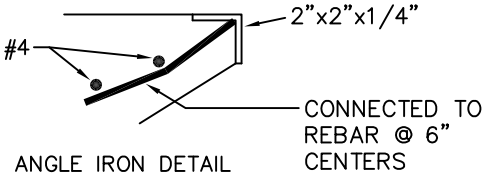

ANGLE IRON DETAIL

DEPARTMENT OF PUBLIC WORKS SPRINGFIELD, MO.	PRECAST INLET TOPS	ADOPTED: 10-1-04 SS-8

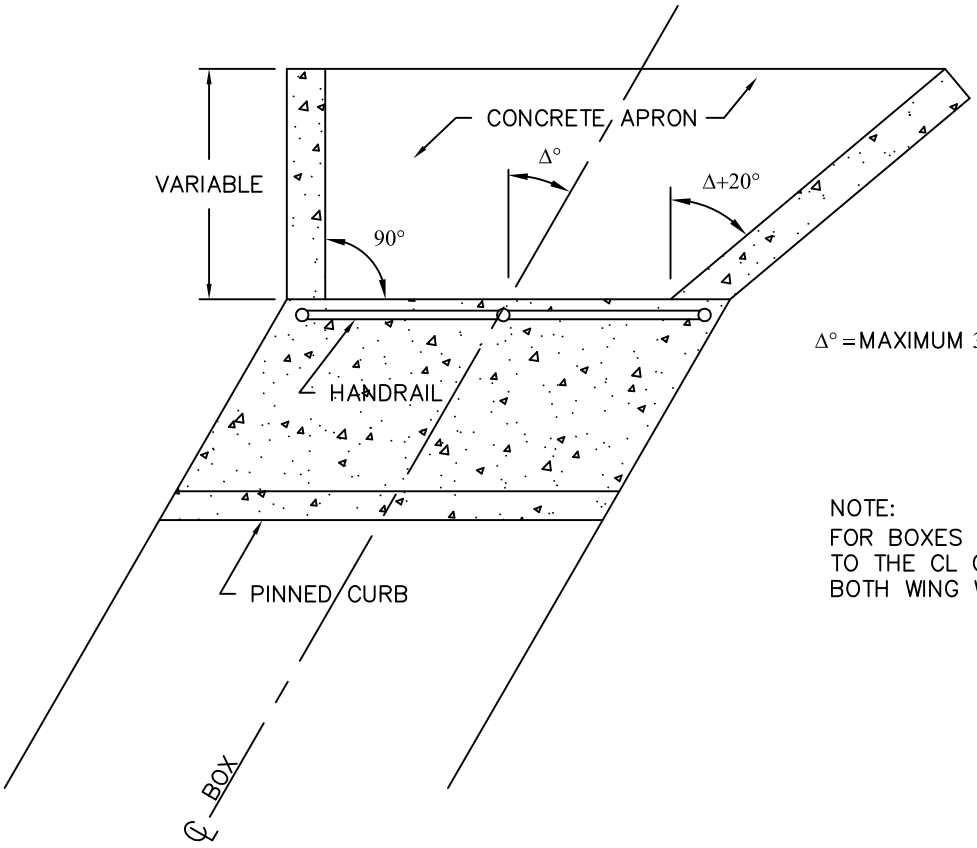

Δ° = MAXIMUM 30°

NOTE:
FOR BOXES AT RIGHT ANGLES TO THE CL OF STREET, FAN BOTH WING WALLS 20°

PLAN

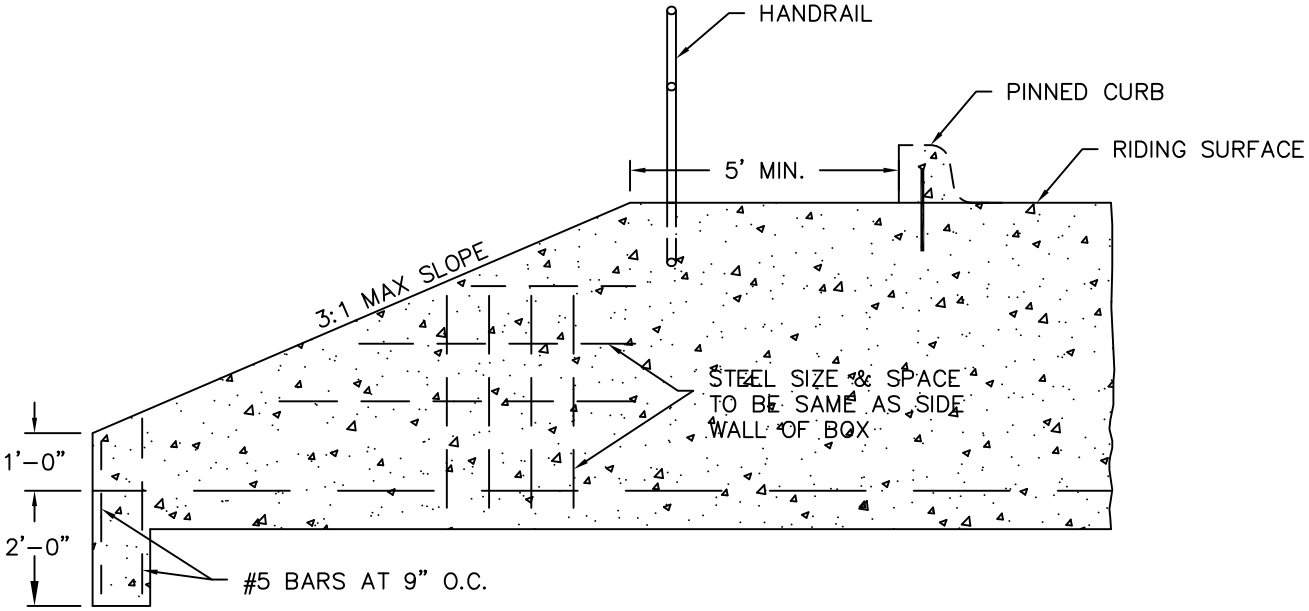

(TOE WALL REQUIRED ON BOTH ENDS OF BOX)

ELEVATION

DEPARTMENT OF PUBLIC WORKS SPRINGFIELD, MO.	CONCRETE BOX TOP RIDING SURFACE	REVISED: 7/1/2013 SS-9

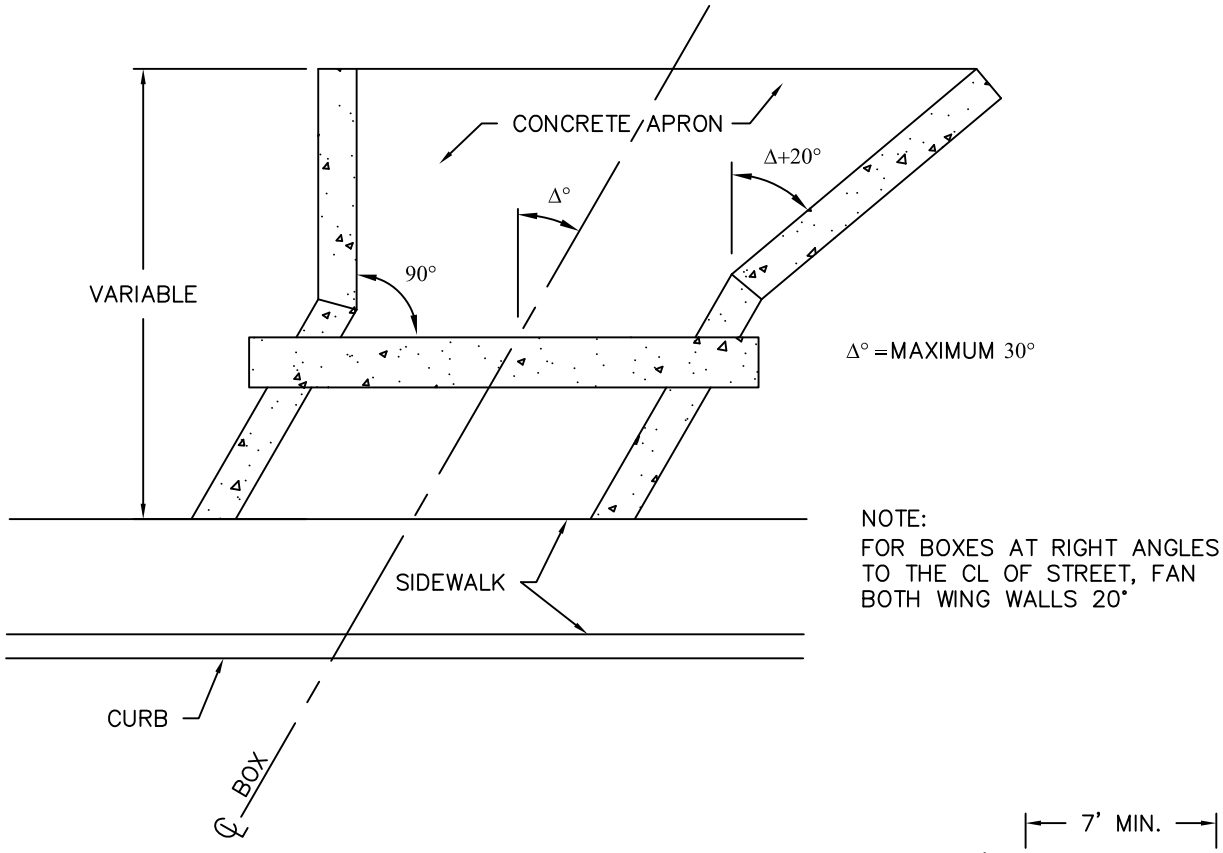

NOTE:
FOR BOXES AT RIGHT ANGLES TO THE CL OF STREET, FAN BOTH WING WALLS 20°

PLAN

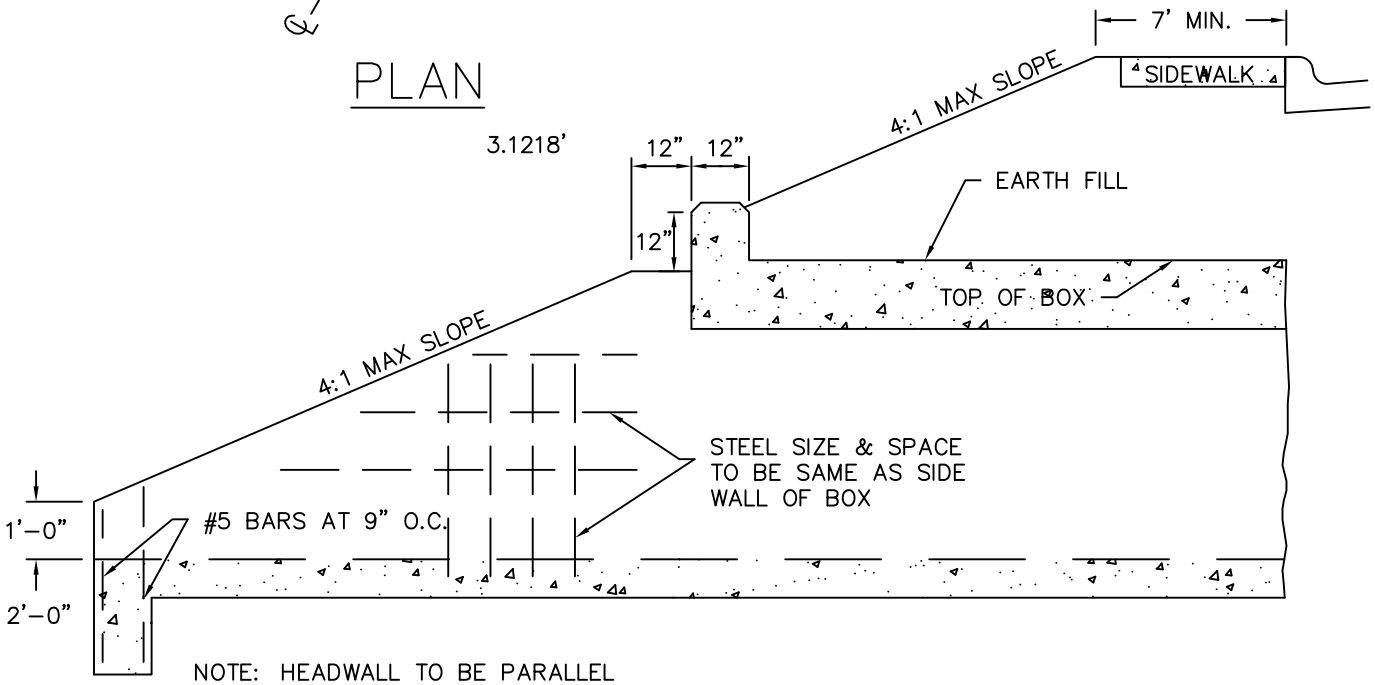

NOTE: HEADWALL TO BE PARALLEL TO CL OF ROADWAY

(TOE WALL REQUIRED ON BOTH ENDS OF BOX)

ELEVATION

DEPARTMENT OF PUBLIC WORKS SPRINGFIELD, MO.	CONCRETE BOX ROADWAY FILL	REVISED: 7/1/2013 SS-10

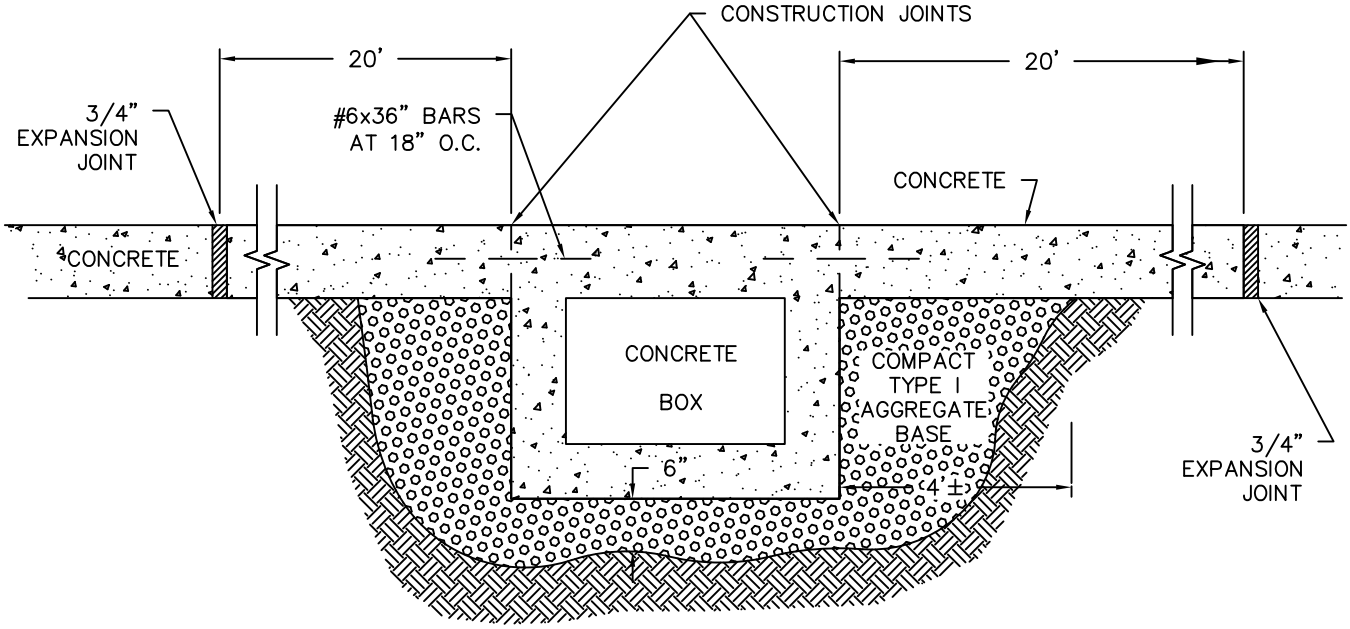

APPROACH TO CULVERT

CONCRETE PAVING

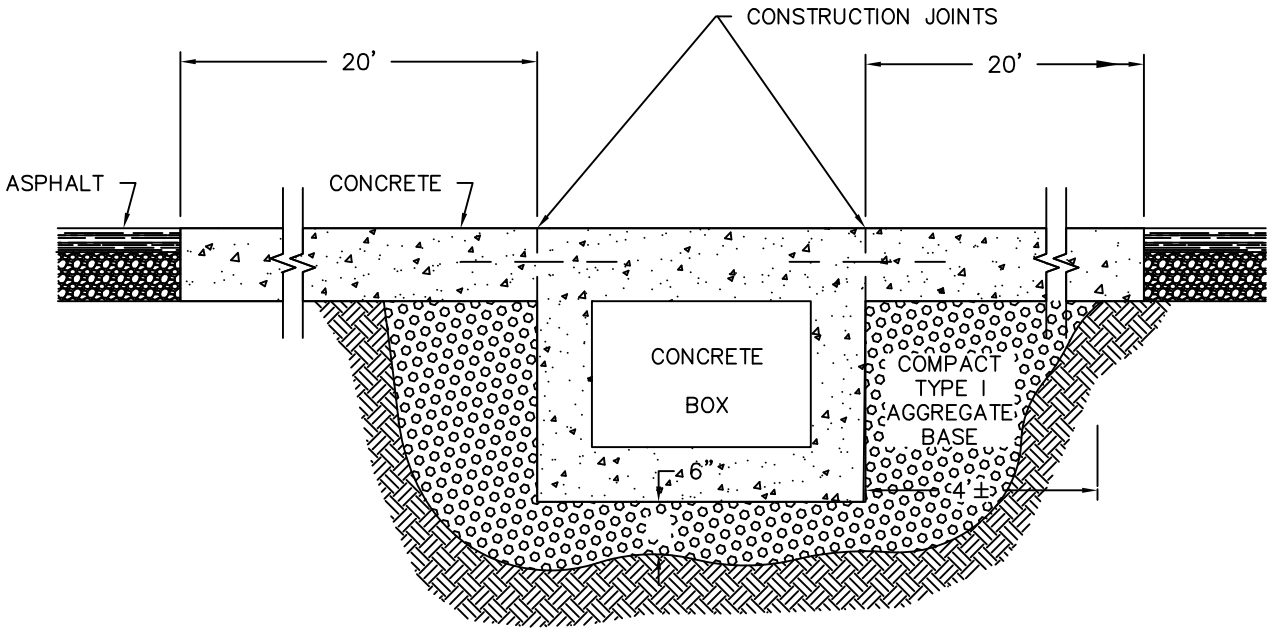

APPROACH TO CULVERT

ASPHALT PAVING

NOTE: PLACE 4' CLAY CAP ON STREET SIDE SLOPES AT EDGES OF CULVERT.

DEPARTMENT OF PUBLIC WORKS SPRINGFIELD, MO.	APPROACH TO BOX CULVERTS	ADOPTED: SS–11

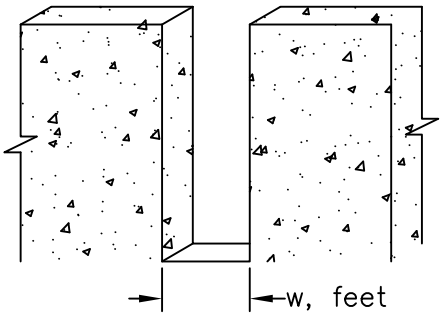

VERTICAL SLOT OUTLET

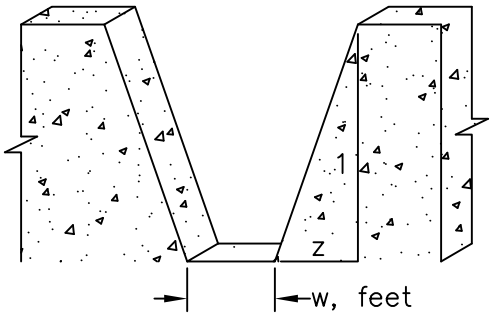

SLOPING SLOT OUTLET

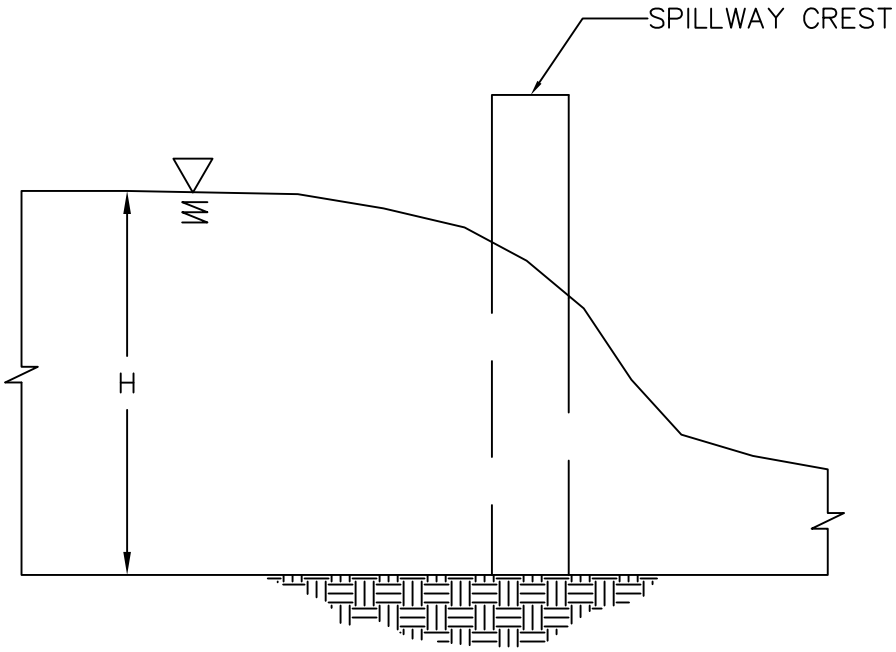

$$Q = 0.86H + (3.65w + 5.82z)H^{3/2}$$

WHERE : Q = FLOWRATE IN CUBIC FEET PER SECOND.
H = UPSTREAM HEAD (PONDED DEPTH ABOVE SLOT INVERT PLUS ANY VELOCITY HEAD) IN FEET.
HEAD IS LIMITED TO A MAXIMUM OF SIX FEET.
w = SLOT INVERT WIDTH PERPENDICULAR TO FLOW IN FEET.
MINIMUM WIDTH OF 0.333 FEET AND MAXIMUM WIDTH OF 2.0 FEET.
z = SLOPE OF SLOT SIDES EXPRESSED IN TERMS z HORIZONTAL:1 VERTICAL.
MINIMUM z = 0.0 FEET MAXIMUM z OF 0.6.

DEPARTMENT OF PUBLIC WORKS SPRINGFIELD, MO.	VERTICAL & SLOPING SLOT OUTLET CALCULATION	ADOPTED: SS-12-B

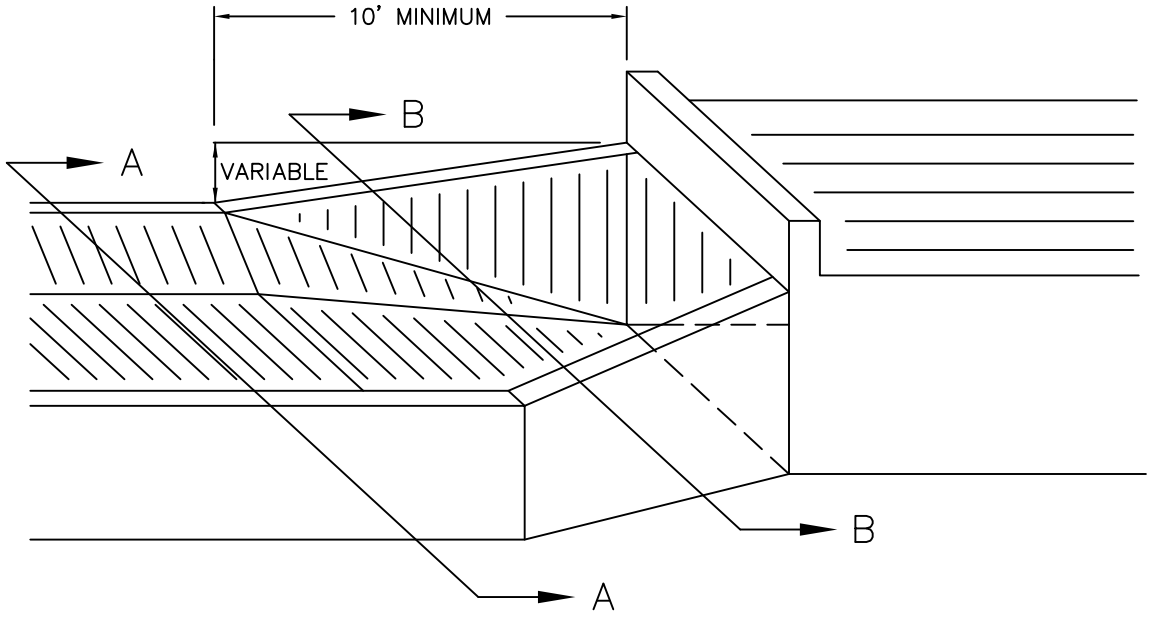

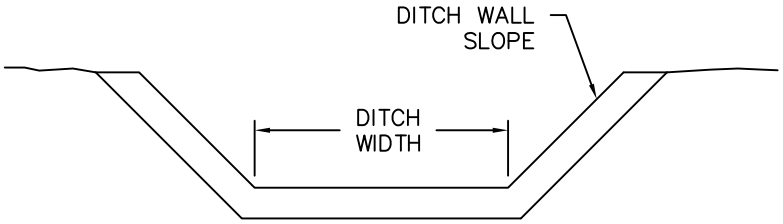

SECTION A–A

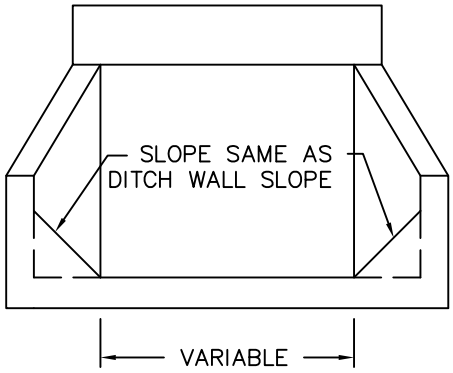

SECTION B–B

DEPARTMENT OF PUBLIC WORKS SPRINGFIELD, MO.	PAVED DITCH TRANSITIONS DETAILS	ADOPTED: SS–13

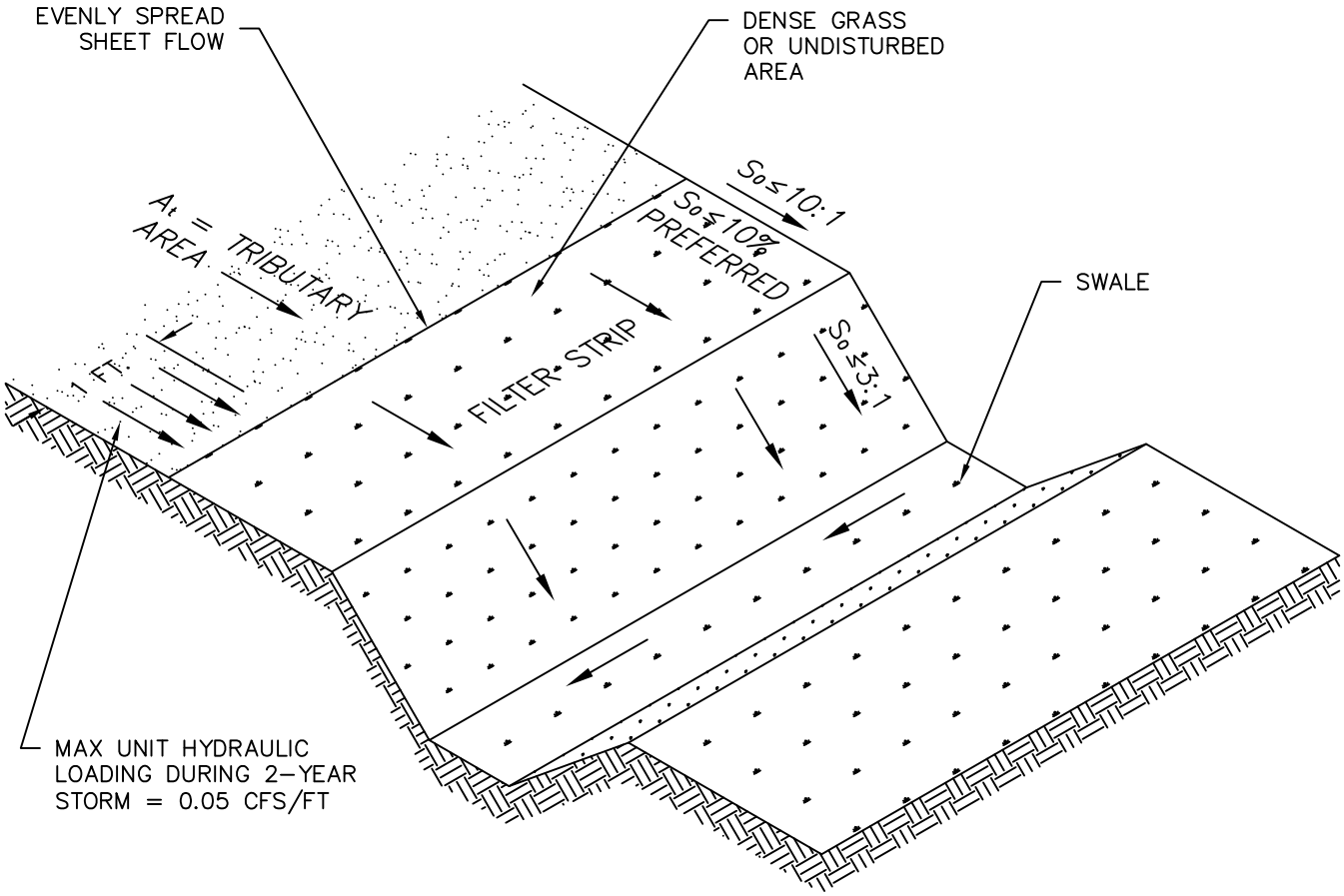

REFER TO SPRINGFIELD WATER QUALITY PROTECTION POLICY FOR FURTHER DESIGN CRITERIA

ADAPTED FROM DENVER URBAN DRAINAGE & FLOOD CONTROL DISTRICT – DRAINAGE CRITERIA MANUAL

DEPARTMENT OF PUBLIC WORKS SPRINGFIELD, MO.	VEGATATIVE FILTER STRIP WATER QUALITY BMP	REVISED: 7/1/2013 SS-14-A

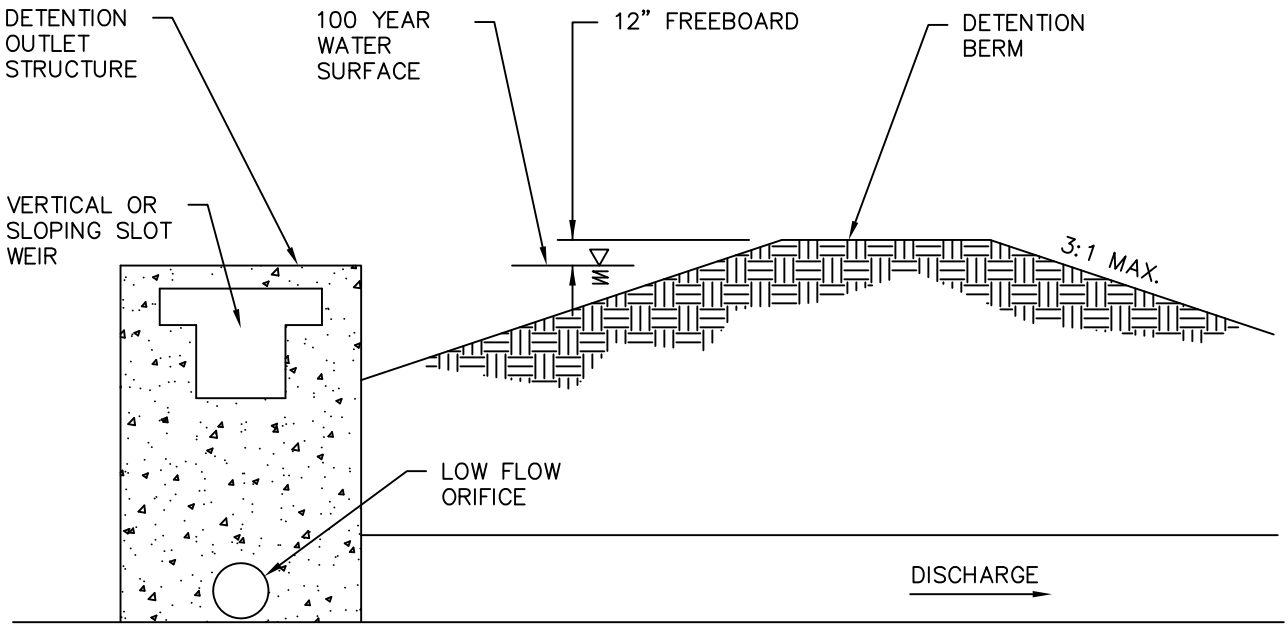

REFER TO SPRINGFIELD WATER QUALITY PROTECTION POLICY FOR FURTHER DESIGN CRITERIA

DEPARTMENT OF PUBLIC WORKS SPRINGFIELD, MO.	VERTICAL BOX DETENTION OUTLET	ADOPTED: SS-14-D

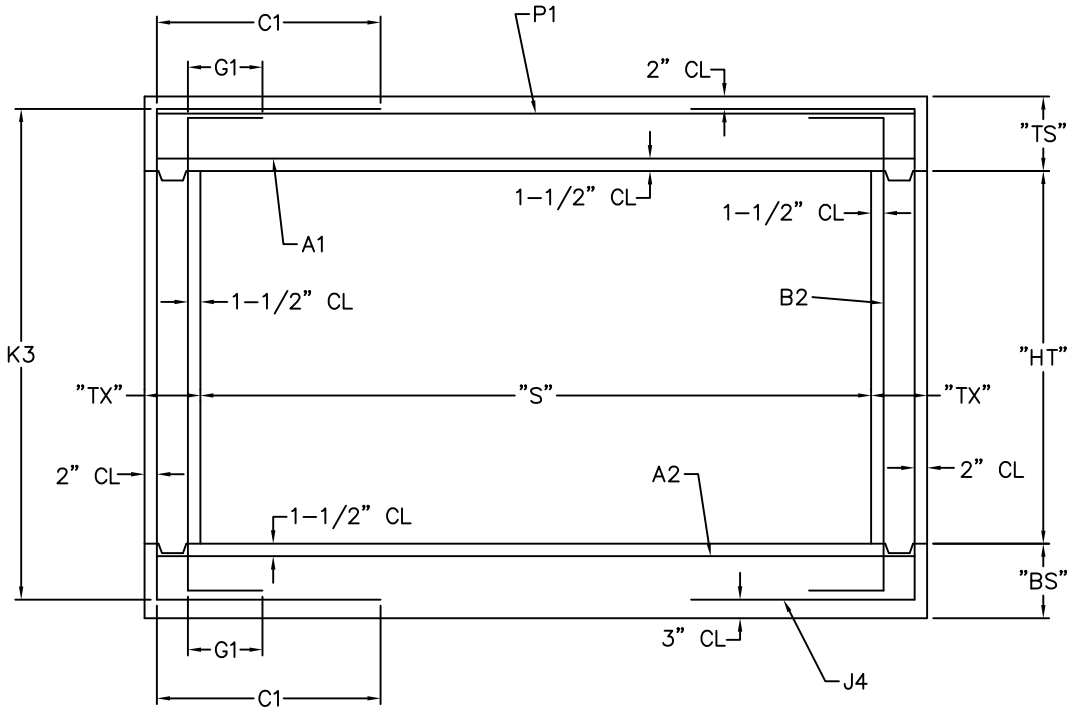

TYPICAL SECTION TO BE COMPLETED AND SHOWN ON PLANS ALONG WITH LOCATION OF F BARS.

GENERAL NOTES:

1. ALL CULVERTS SHALL BE DESIGNED FOR HS20 LOADINGS USING CONCRETE, f'c = 4,000 psi OR GREATER, REINFORCING STEEL (GRADE 60), fy = 60,000 psi
2. LAP ALL LONGITUDINAL BARS A MINIMUM OF 23" AT SPLICES
3. ALL DIMENSIONS ARE TO BE SHOWN IN INCHES.
4. MINIMUM CLEARANCE TO REINFORCING STEEL SHALL BE 1-1/2 INCHES UNLESS OTHERWISE SHOWN.
5. F BARS ARE TO BE A MINIMUM #4 WITH SPACING LABELED ON SECTION VIEW.
6. A FILTER CLOTH 3 FEET IN WIDTH AND DOUBLE THICKNESS SHALL BE APPLIED TO ALL TRANSVERSE JOINTS IN THE TOP SLAB AND SIDEWALLS. THE MATERIAL SHALL BE CENTERED ON THE JOINT AND THE EDGES SHALL BE SEALED WITH A MASTIC OR WITH TWO SIDED TAPE. THE FILTER CLOTH SHALL BE A GEOTEXTILE MEETING THE APPROVAL OF THE ENGINEER AND HAVING A GRAB TENSILE STRENGTH OF 180 LBS. (ASTM D-4632) AND AN APPARENT OF 50 TO 100 (ASTM D-4751). COST OF FURNISHING AND INSTALLING THE FILTER CLOTH WILL BE CONSIDERED COMPLETELY COVERED BY THE CONTRACT UNIT PRICE FOR OTHER ITEMS.
7. THE DESIGN SHALL SHOW AS A MINIMUM; THE DESIGN LOAD, DESIGN FILL HEIGHT, CONCRETE AND STEEL STRESS USED, AND THE FOLLOWING INFORMATION.

TABLE TO COMPLETED BY DESIGNER

BAR	SIZE	C to C	LENGTH
A1			
A2			
B2			
J4			
P1			
F			

DESIGN LOAD _____

f'c _____

fy _____

DEPARTMENT OF PUBLIC WORKS SPRINGFIELD, MO.	CONCRETE BOX CULVERT MINIMUM REINFORCMENT DETAILS	ADOPTED: 10-1-04 SS-15

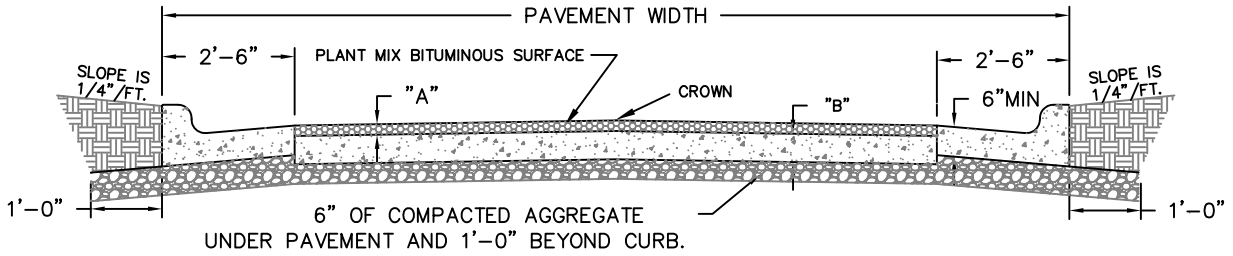

BITUMINOUS PAVEMENT WITH CONCRETE CURB & GUTTER

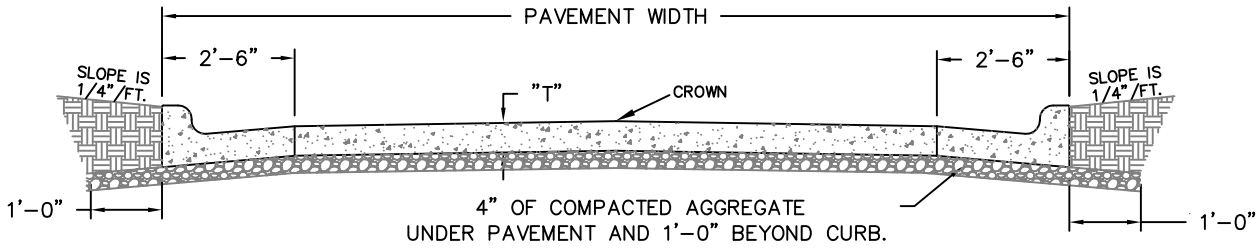

PORTLAND CEMENT CONCRETE PAVEMENT AND CONCRETE CURB & GUTTER

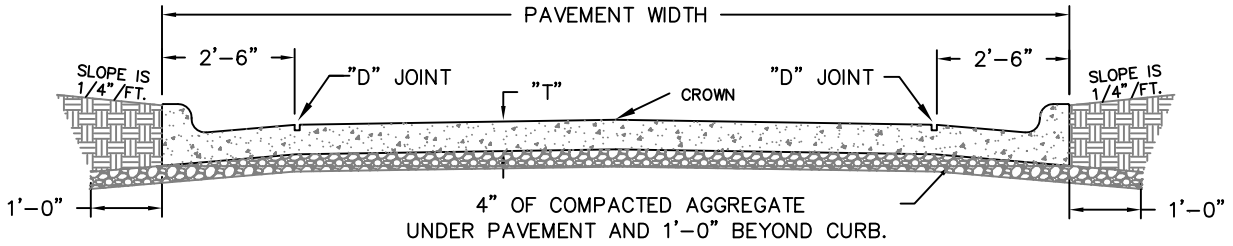

PORTLAND CEMENT CONCRETE PAVEMENT WITH INTEGRAL CURB

STANDARD PAVEMENT WIDTH AND THICKNESS			
STREET TYPE	"T"	"A"	"B"
ALLEY/LOCAL	6"	2"	5"
COLLECTOR	6"	2"	6"
SECONDARY ARTERIAL	7"	2"	8"
PRIMARY ARTERIAL	8"	2"	9"

NOTES: CROSS SLOPE SHALL BE 1/4"/FT. ON ALL PAVEMENTS EXCEPT ALLEYS, SEE STANDARD DRAWING ST-4.

WIDTH OF PAVEMENT IS SUBJECT TO REQUIREMENTS OF THE PLANNING DEPARTMENT AND MAY VARY FROM THE STANDARDS.

TO CREATE A GUTTER SECTION THE CONTRACTOR SHALL FORM A 2" RISE 2' FROM THE INSIDE OF THE CURB. PAVEMENT WIDTH WILL BE MEASURED FROM BACK OF CURBS ON IMPROVED STREETS. PAVEMENT CROWN SHOULD BE CENTERED IN RIGHT OF WAY.

DEPARTMENT OF PUBLIC WORKS SPRINGFIELD, MO.	TYPICAL STREET SECTIONS	REVISED: 7/1/2013
		ST-1

NOTE: KEYWAY OR #5 REBAR @ 2' 6" O.C. TO BE USEDON ALL CONCRETE PAVEMENT.
ASPHALT PAVEMENT – DOWELL AND KEYWAY SHALL BE OMITTED

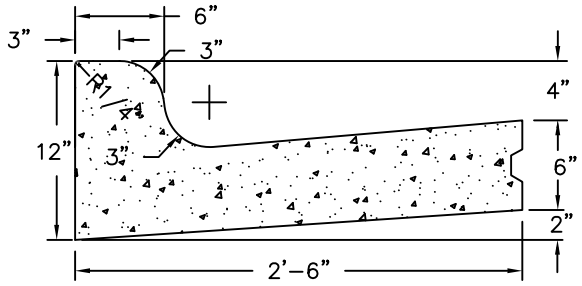

ALLEYS, LOCAL, AND COLLECTOR STREETS

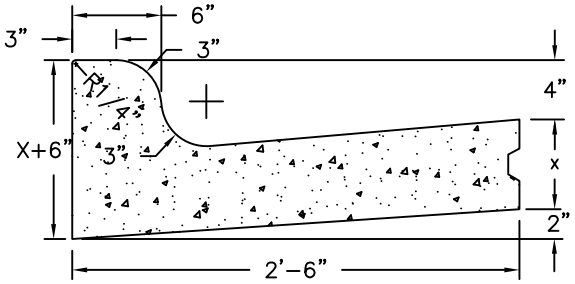

COLLECTOR, 2ND ARTERIAL & HIGHER
X TO MATCH PAVEMENT THICKNESS;
8" MAX FOR ASPHALT PAVEMENT

STANDARD RESIDENTIAL DRIVEWAY OPENING

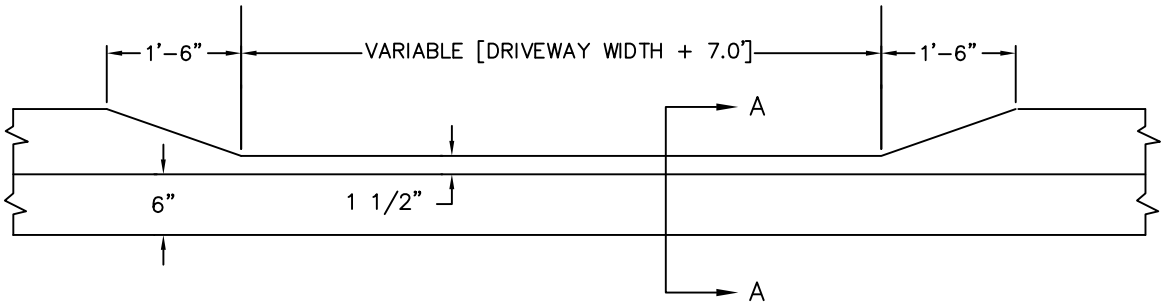

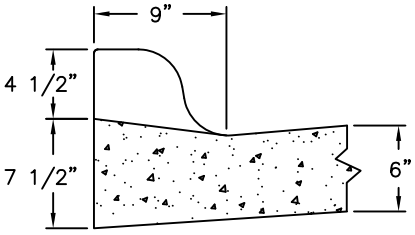

SECTION A–A

DEPARTMENT OF PUBLIC WORKS SPRINGFIELD, MO.	CURB & GUTTER / DRIVEWAY OPENING	REVISED 7–1–2015 ST–2

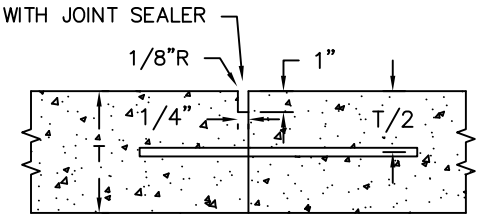

DOWELED LONGITUDINAL JOINT
WITH 24" No.6 DEFORMED BAR AT 24" O.C.

TYPE "A"

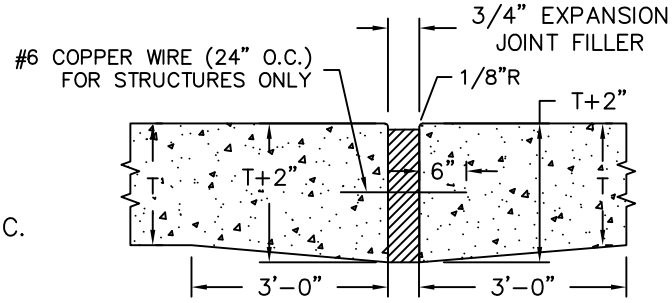

EXPANSION JOINT

TYPE "E"

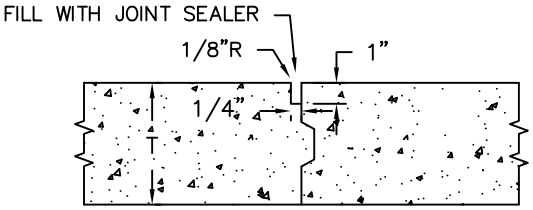

KEYED LONGITUDINAL JOINT

TYPE "B"

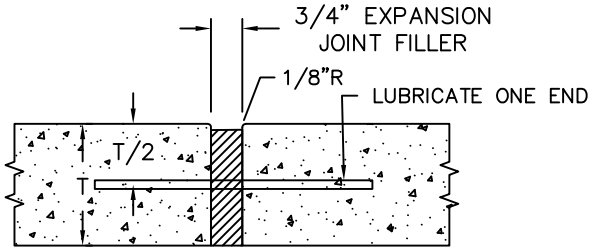

DOWELED EXPANSION JOINT
3/4" x 15" DOWEL BAR AT 24" O.C.

TYPE "F"

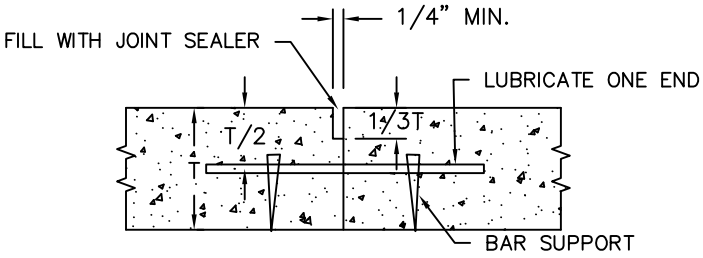

SAWED CONTRACTION JOINT WITH
1" x 18" DOWEL BAR AT 24" O.C.

TYPE "C"

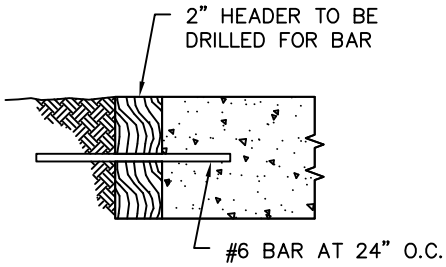

CONSTRUCTION HEADER CONCRETE

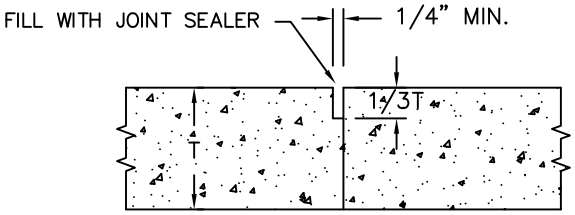

SAWED CONTRACTION JOINT

TYPE "D"

DEPTH OF SAW JOINT:
$\frac{1}{3}$ OF PAVEMENT THICKNESS

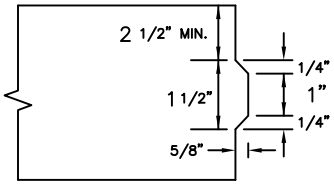

DETAIL KEY
KEYWAY FORMED BY FASTENING KEY TO FORM

DEPARTMENT OF PUBLIC WORKS SPRINGFIELD, MO.	JOINT DETAILS – CONCRETE PAVEMENT	REVISED: 7/1/2013 ST–3

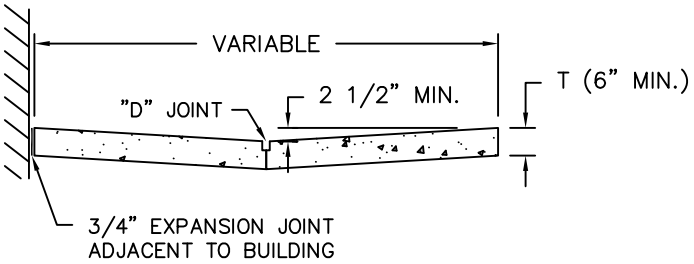

TYPICAL ALLEY SECTION

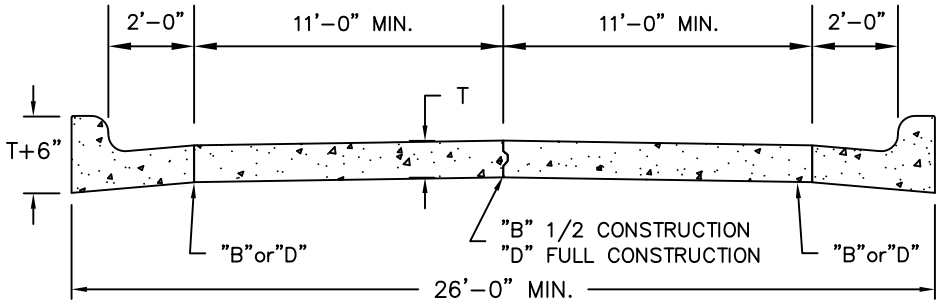

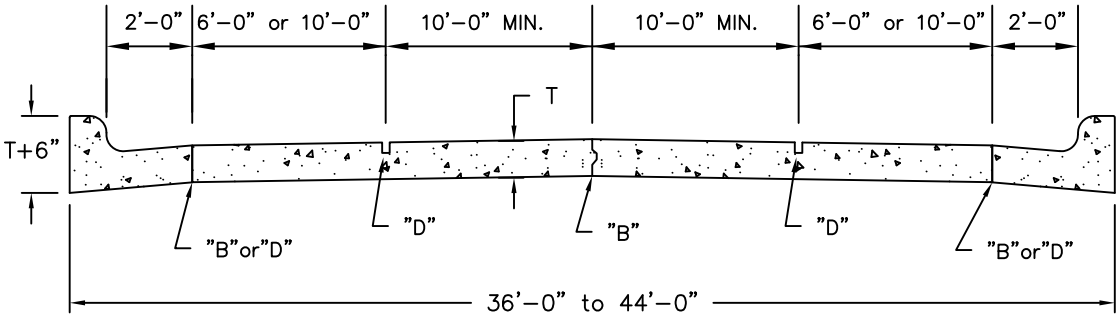

CONCRETE PAVEMENT – JOINT LOCATIONS

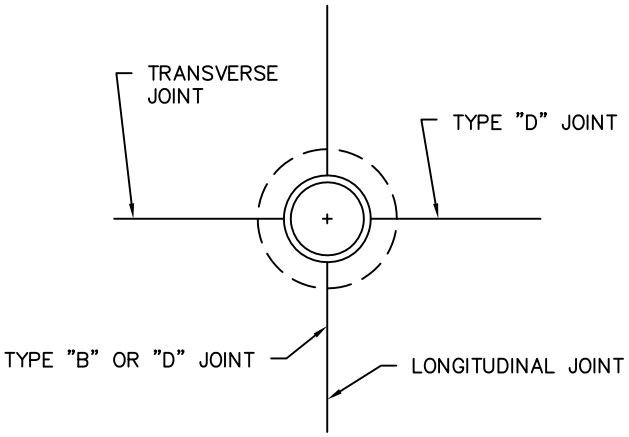

MANHOLE JOINT DETAIL

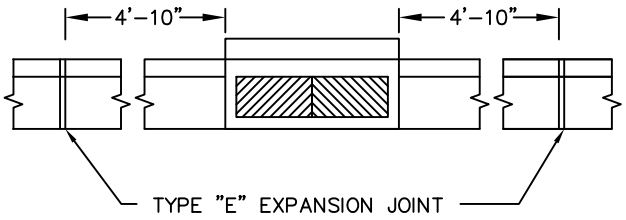

JOINT LOCATION AT INLETS

DEPARTMENT OF PUBLIC WORKS SPRINGFIELD, MO.	JOINT LOCATION – CONCRETE PAVEMENT	ADOPTED: ST–4

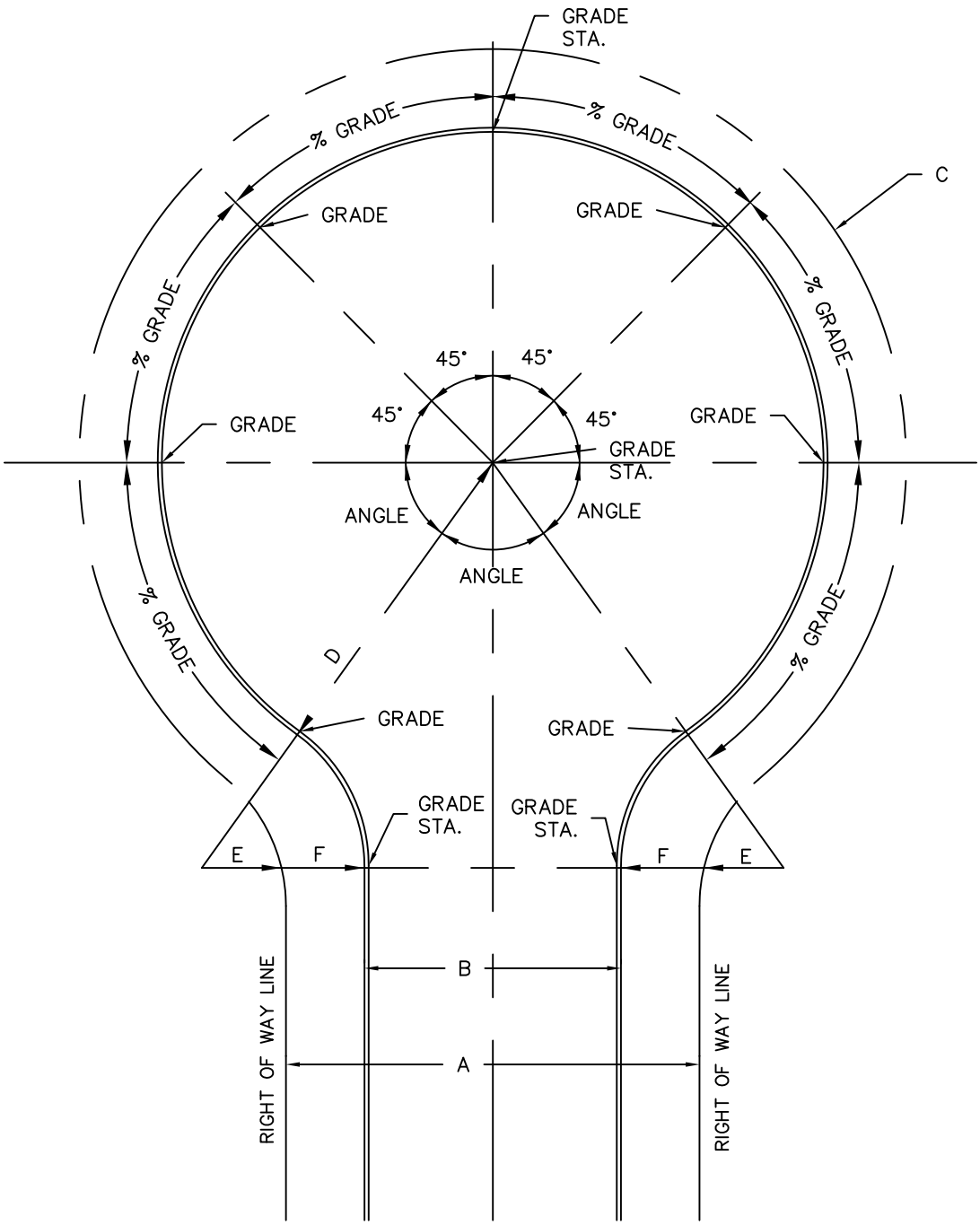

MINIMUM DIMENSIONS (FEET)			
DESCRIPTION	**KEY**	**STANDARD**	**INDUSTRIAL**
STREET RIGHT-OF-WAY WIDTH	A	50	60
STREET PAVEMENT WIDTH TO BACK OF CURB	B	27	37
CUL-DE-SAC RIGHT-OF-WAY RADIUS	C	60	75
CUL-DE-SAC PAVEMENT RADIUS TO BACK OF CURB	D	48.5	63.5
INTERNAL CURVE, RIGHT-OF-WAY RADIUS	E	20	20
INTERNAL CURVE, BACK OF CURB RADIUS	F	31.5	31.5

NOTE: MAXIMUM LENGTH OF CUL–DE–SAC
SHALL BE 800 FEET.

DEPARTMENT OF PUBLIC WORKS SPRINGFIELD, MO.	STANDARD CUL–DE–SAC	ADOPTED: DRAFT ST–5

MINIMUM REQUIREMENTS FOR LAYOUT ELEMENTS

X DENOTES THAT STALL NOT ACCESSIBLE IN CERTAIN LAYOUTS

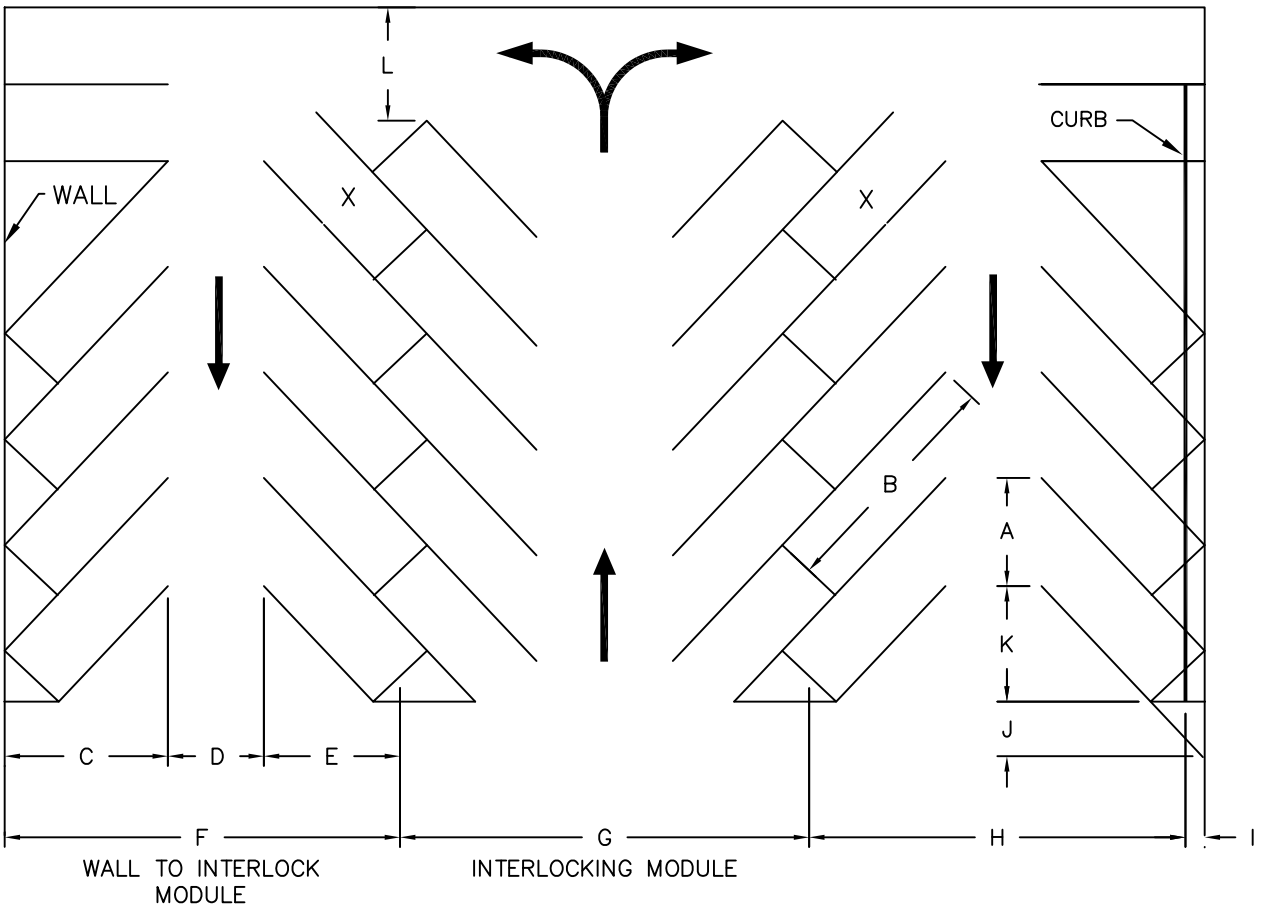

PARKING LAYOUT DIMENSIONS (IN FEET) FOR 9 FT. STALLS AT VARIOUS ANGLES

DIMENSION	SYMBOL	90°	75°	60°	45°	30°
STALL WIDTH, PARALLEL TO AISLE	A	9.0	9.3	10.4	12.7	18.0
STALL LENGTH OF LINE	B	18.5	20.0	22.0	25.0	34.1
STALL DEPTH TO WALL	C	18.5	19.5	19.0	17.5	17.1
AISLE WIDTH BETWEEN STALL LINES	D	26.0	23.0	16.0	12.0	10.0
STALL DEPTH, INTERLOCK	E	18.5	18.8	17.5	15.3	13.2
MODULE, WALL TO INTERLOCK	F	63.0	61.3	52.5	44.8	40.3
MODULE, INTERLOCKING	G	63.0	61.0	51.0	42.6	36.4
MODULE, INTERLOCK TO CURB FACE	H	60.5	58.8	50.2	42.8	38.8
BUMPER OVERHANG (TYPICAL)	I	2.5	2.5	2.3	2.0	1.5
OFFSET	J	0.0	0.5	2.7	6.3	13.5
SETBACK	K	0.0	5.0	8.3	11.0	16.0
CROSS AISLE, ONE-WAY	L	14.0	14.0	14.0	14.0	14.0
CROSS AISLE, TWO-WAY	–	24.0	24.0	24.0	24.0	24.0

NOTE: ANY PARKING LAYOUT OTHER THAN SHOWN MUST BE APPROVED BY THE CITY TRAFFIC ENGINER.

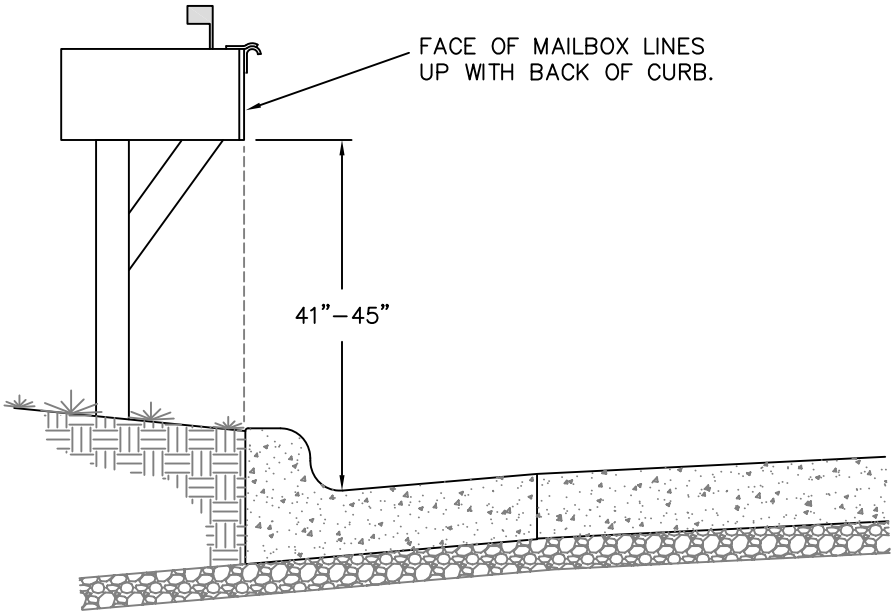

IMPROVED STREETS

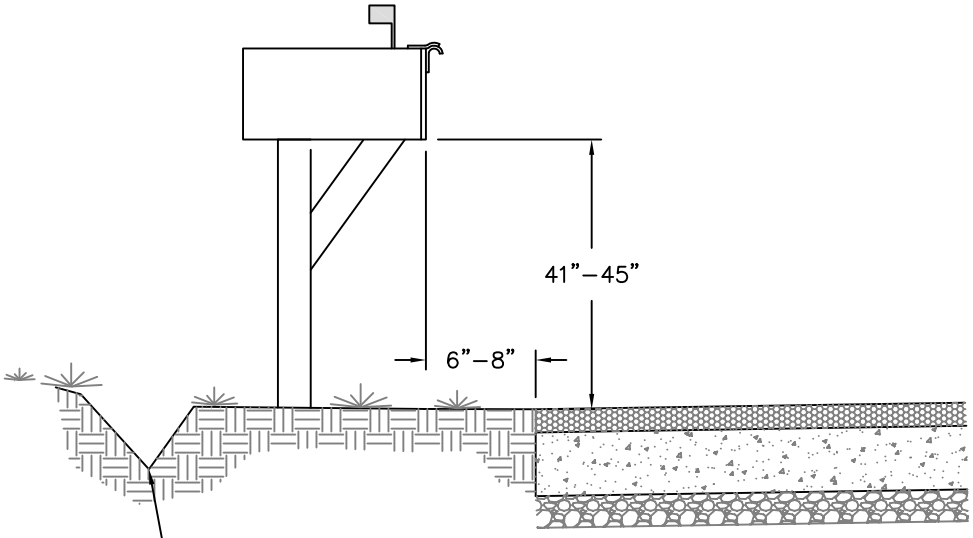

UNIMPROVED STREETS

NOTE:
DITCH SECTION BEHIND MAILBOX
WITH A PEDESTRIAN CROSSING.

DEPARTMENT OF PUBLIC WORKS SPRINGFIELD, MO.	MAILBOX REPLACEMENT	REVISED: 7/1/2013 ST–7

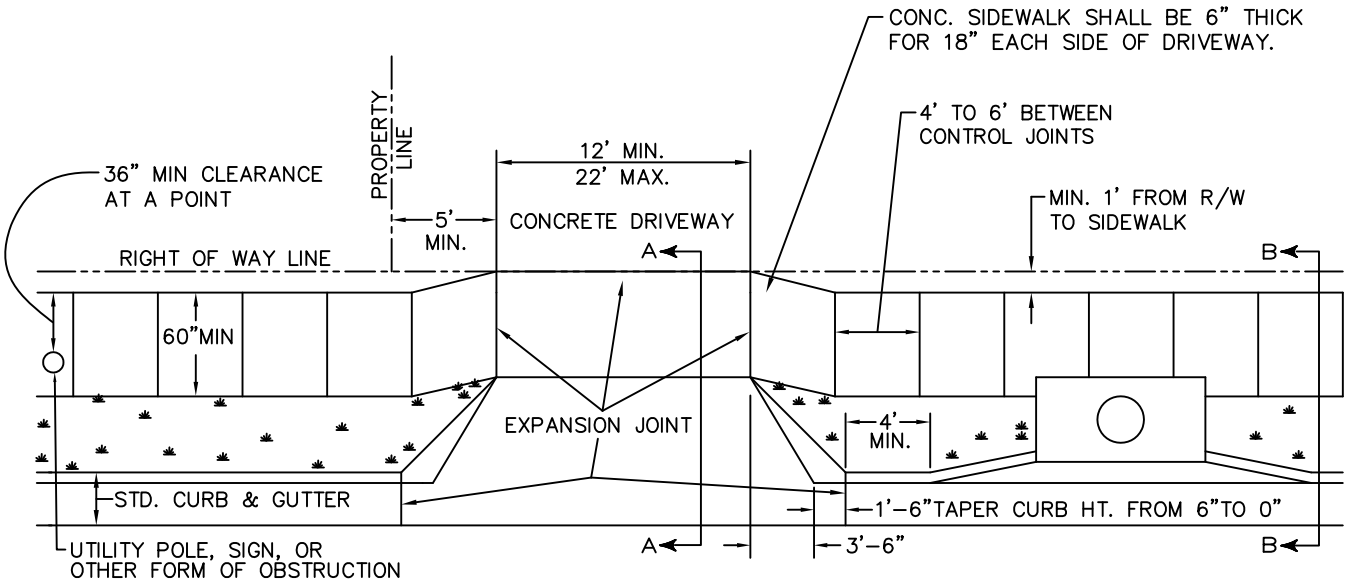

TYPICAL DRIVEWAY PLAN VIEW

NOTE:
ANY PART OF AN ACCESSIBLE ROUTE WITH A RUNNING SLOPE GREATER THAN 1:20 SHALL BE CONSIDERED A RAMP AND SHALL COMPLY WITH THOSE REGULATIONS.

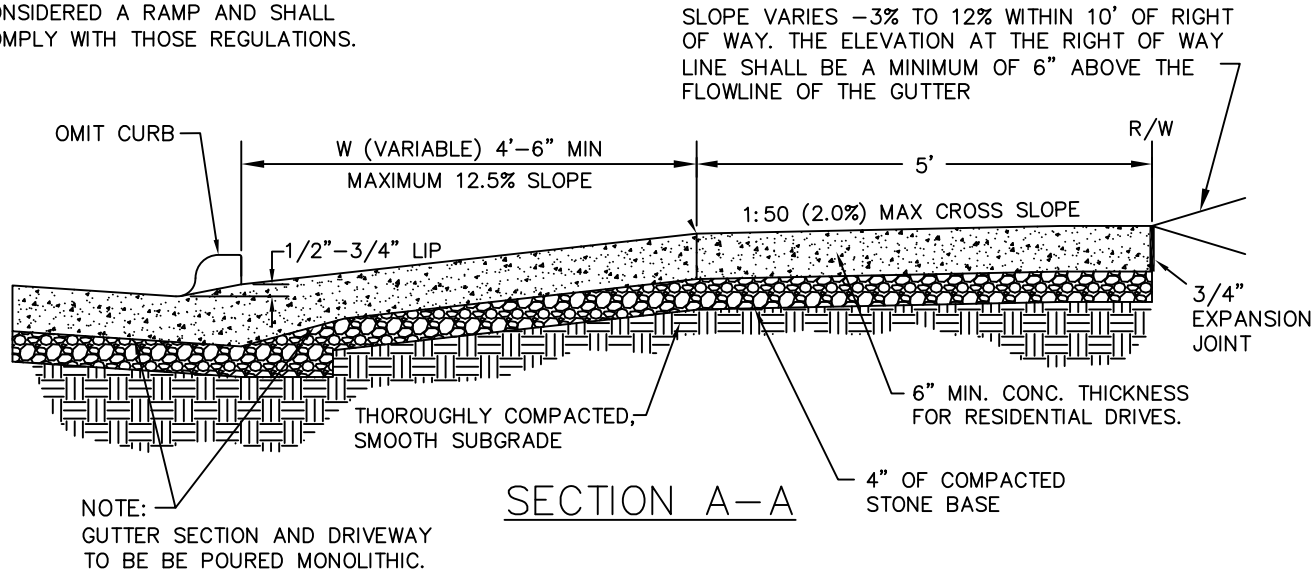

SECTION A-A

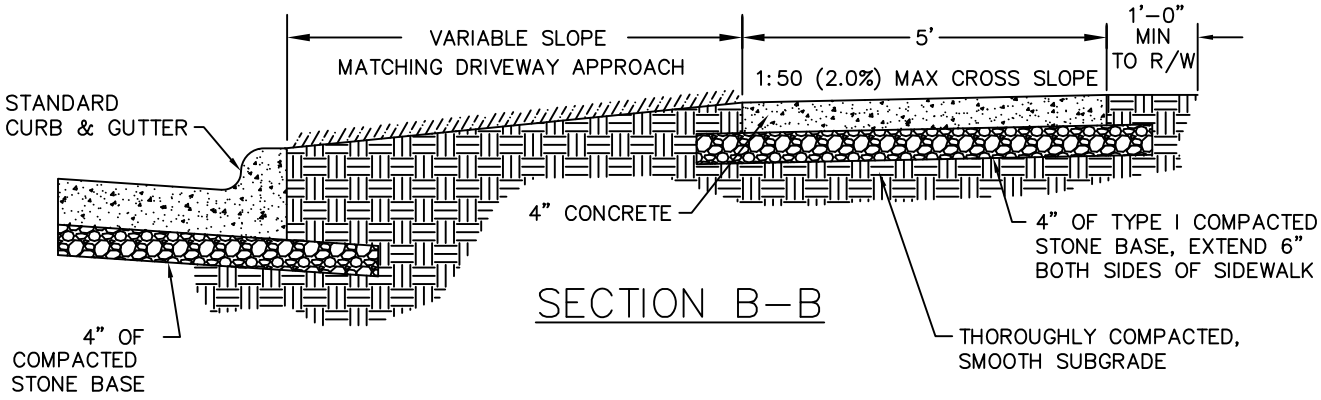

SECTION B-B

DEPARTMENT OF PUBLIC WORKS SPRINGFIELD, MO.	TYPICAL RESIDENTIAL DRIVEWAY & SIDEWALK	REVISED: 7/1/2013
		ST-8

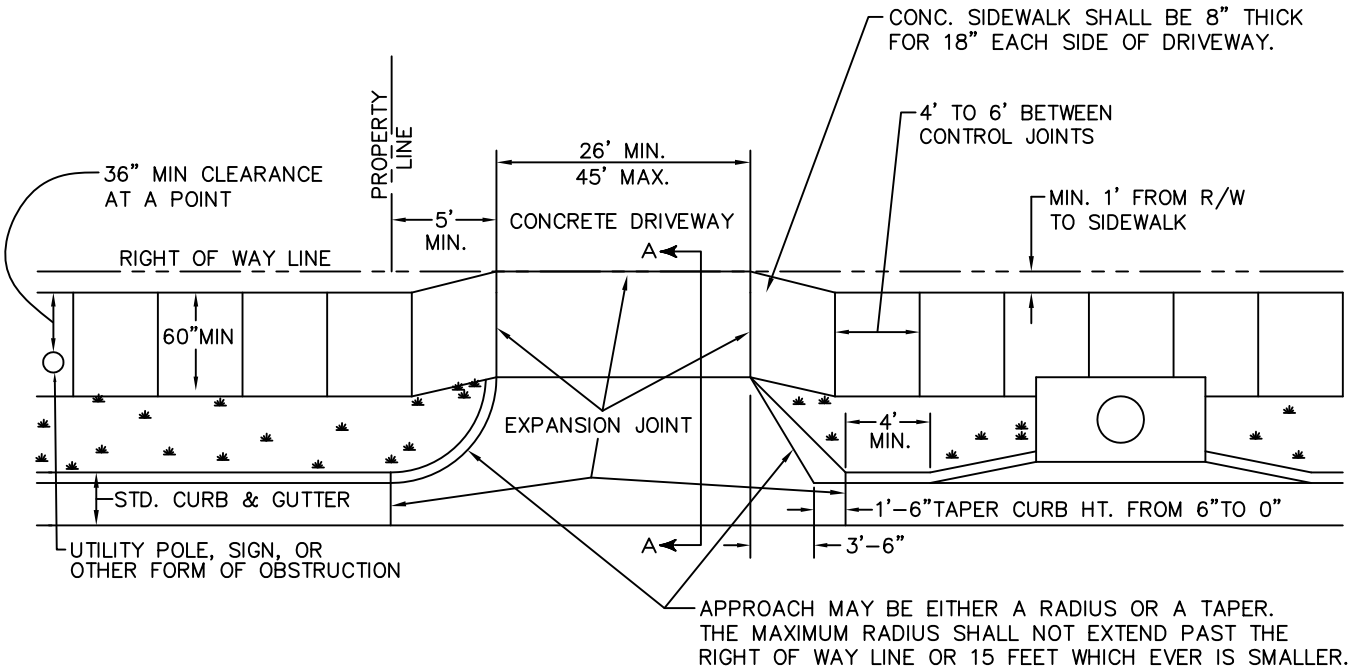

TYPICAL DRIVEWAY PLAN VIEW

NOTE:
ANY PART OF AN ACCESSIBLE ROUTE WITH A RUNNING SLOPE GREATER THAN 1:20 SHALL BE CONSIDERED A RAMP AND SHALL COMPLY WITH THOSE REGULATIONS.

REQUIRED DRIVEWAY GRADES				
	MAJOR ARTERIAL	SECONDARY ARTERIAL	COLLECTOR	NON-RESIDENTIAL LOCAL
A. DRIVEWAY APPROACH GRADE	1/4in/ft to 1/2in/ft	1/4in/ft to 5/8in/ft	1/4in/ft to 3/4in/ft	1/4in/ft to 1in/ft
B. MAXIMUM CHANGE OF GRADE AT BACK OF SIDEWALK	4%	5%	6%	8%
C. SLOPE WITHIN 10 FEET OF RIGHT-OF-WAY LINE	-2% to 6% 1/4in/ft to 3/4in/ft	-3% to 7% -3/8in/ft to 7/8in/ft	-4% to 8% -1/2in/ft to 1in/ft	-6% to 10% -3/4in/ft to 1-1/4in/ft

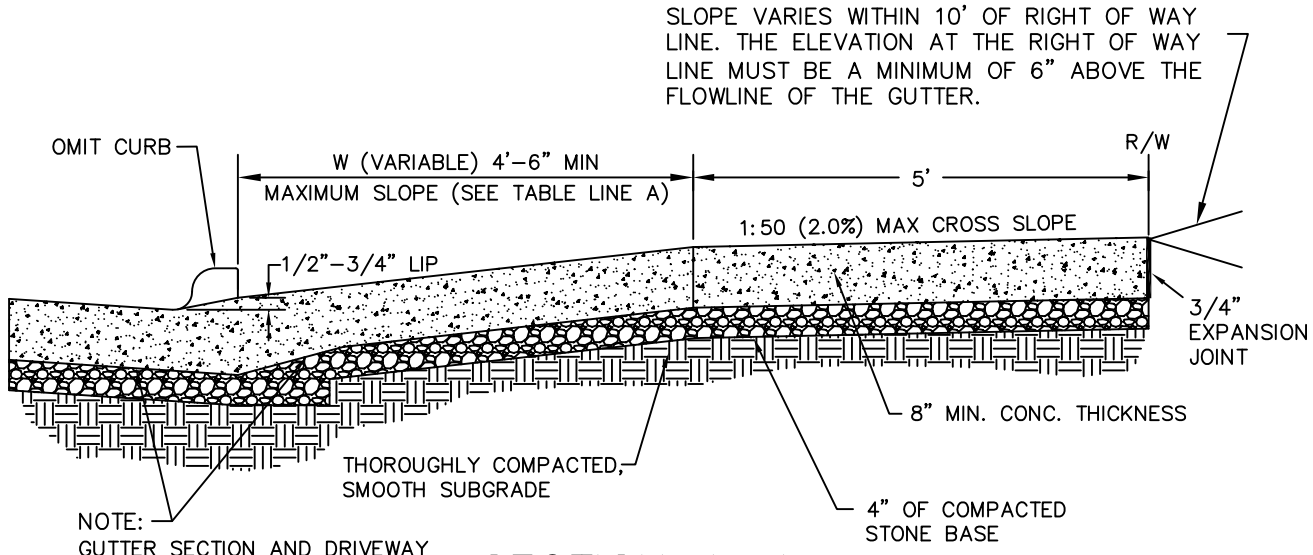

SECTION A-A

REVISED: 10-17-05; REMOVED REINFOREMENT REQUIREMENTS.

DEPARTMENT OF PUBLIC WORKS SPRINGFIELD, MO.	TYPICAL COMMERCIAL DRIVEWAY & SIDEWALK	REVISED: 7/1/2013 ST-9

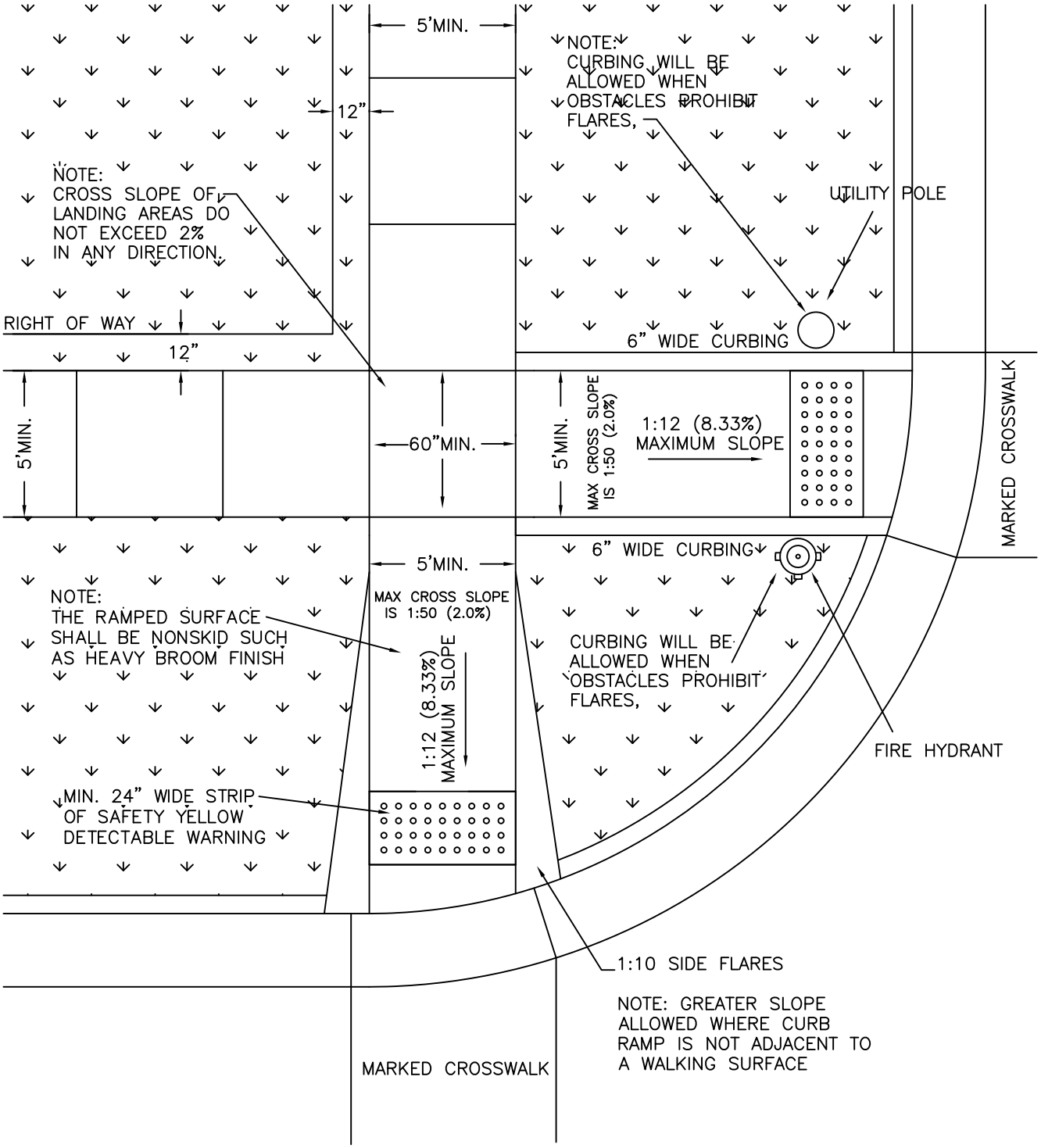

DEPARTMENT OF PUBLIC WORKS SPRINGFIELD, MO.	CURB RAMP TYPE 1	REVISED: 7/1/2013 ST–10

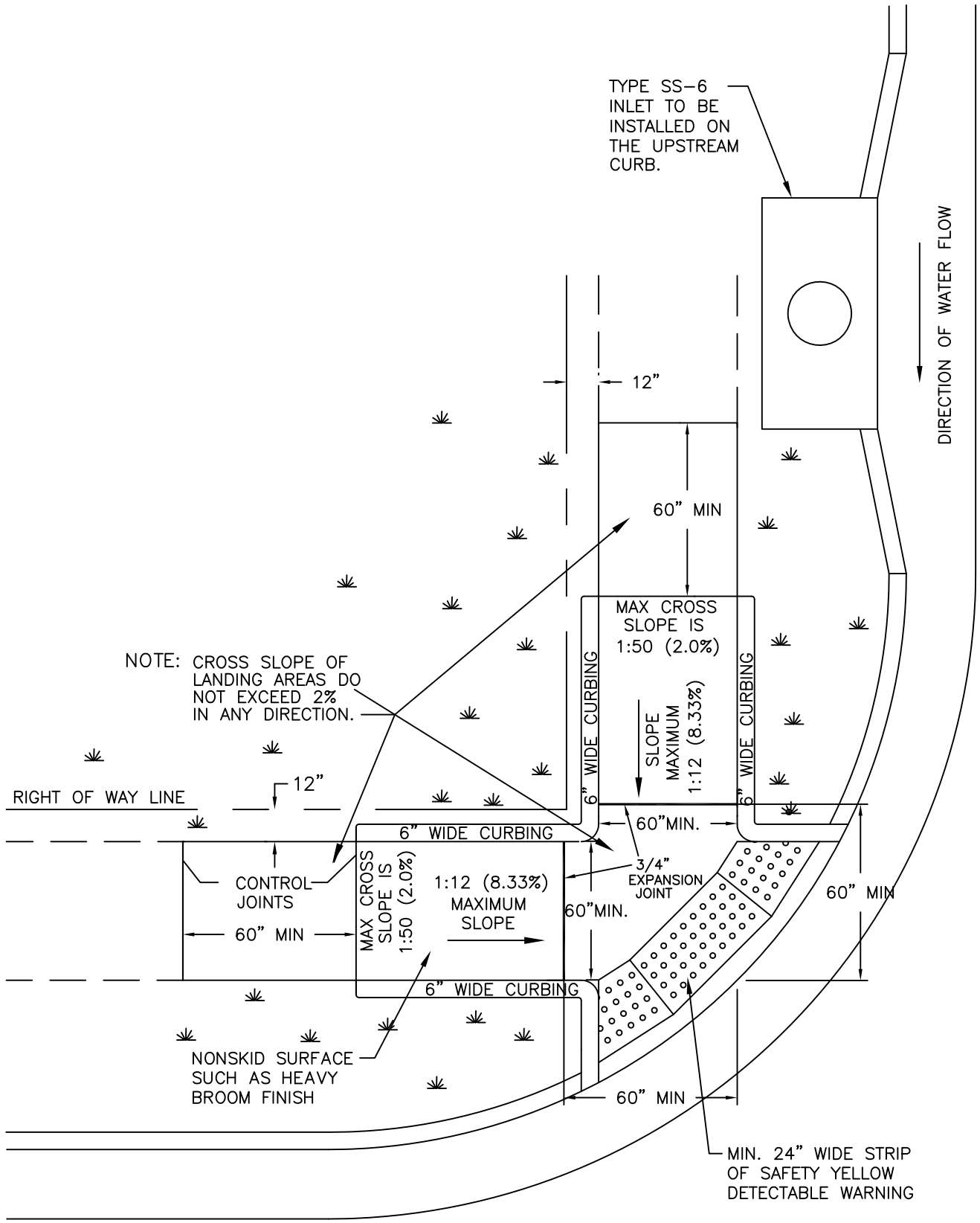

NOTE: USE CURB RAMP STYLE II WHEN DISTANCE FROM FACE OF CURB AND THE RIGHT OF WAY LINE IS LESS THAN AN ALLOWABLE DISTANCE TO INSTALL A CURB RAMP TYPE I WITH A 1:12 (8.33%) RUNNING SLOPE.

DEPARTMENT OF PUBLIC WORKS SPRINGFIELD, MO.	CURB RAMP TYPE II	REVISED: 7/1/0213 ST-11

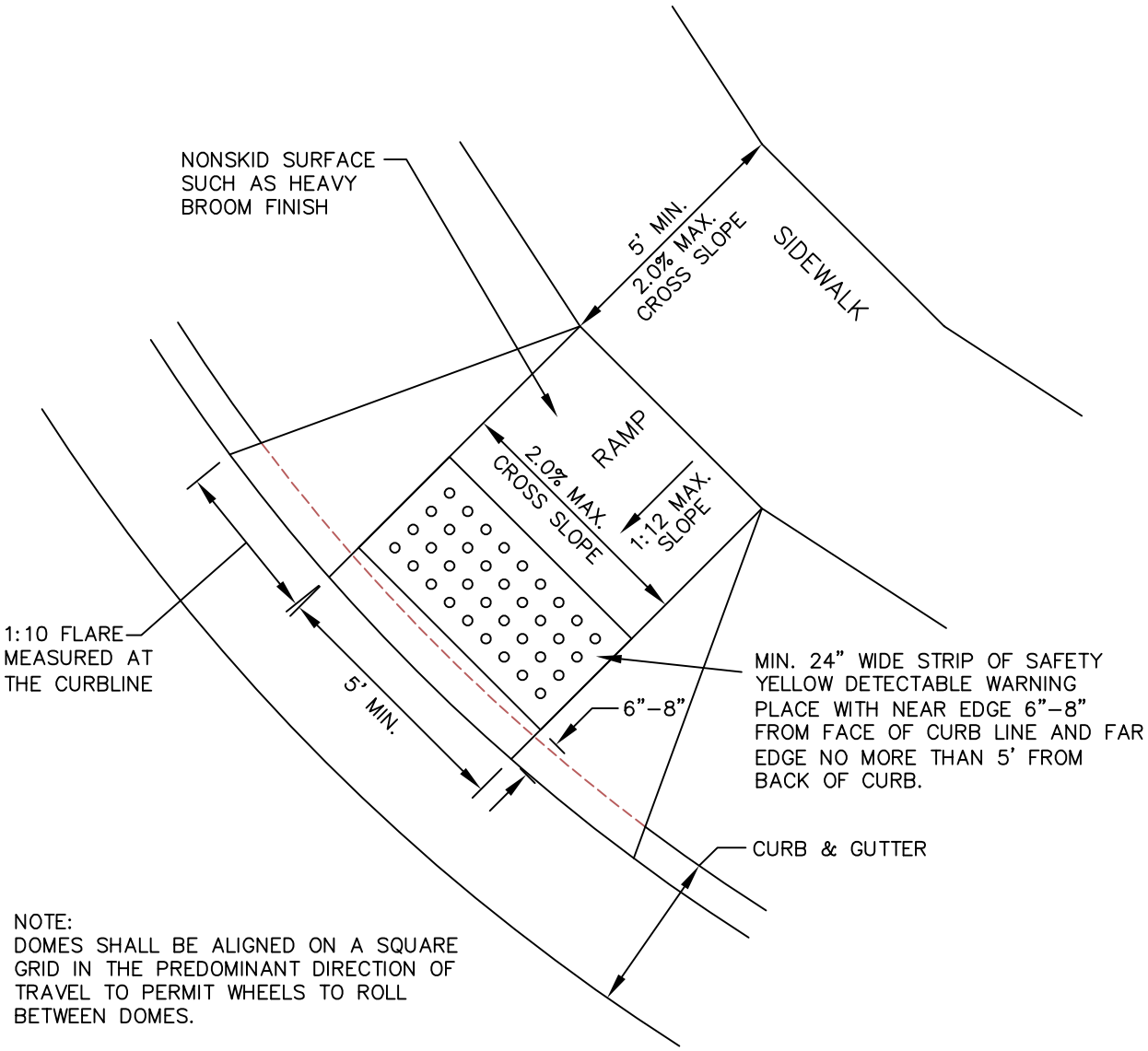

NOTE:
DOMES SHALL BE ALIGNED ON A SQUARE GRID IN THE PREDOMINANT DIRECTION OF TRAVEL TO PERMIT WHEELS TO ROLL BETWEEN DOMES.

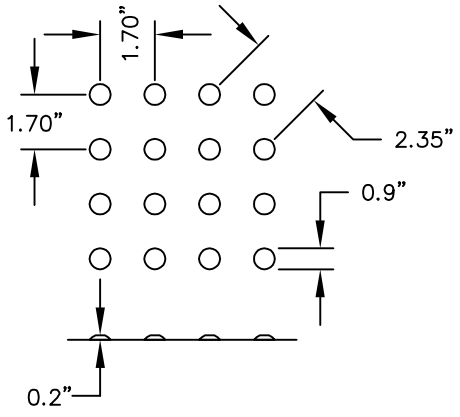

DOME SPACING

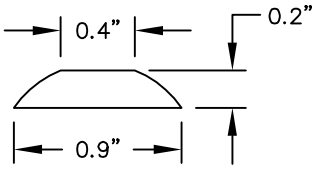

DOME SECTION

DEPARTMENT OF PUBLIC WORKS SPRINGFIELD, MO.	CURB RAMP WITH DETECTABLE WARNING	REVISED: 3/21/2016 ST–12

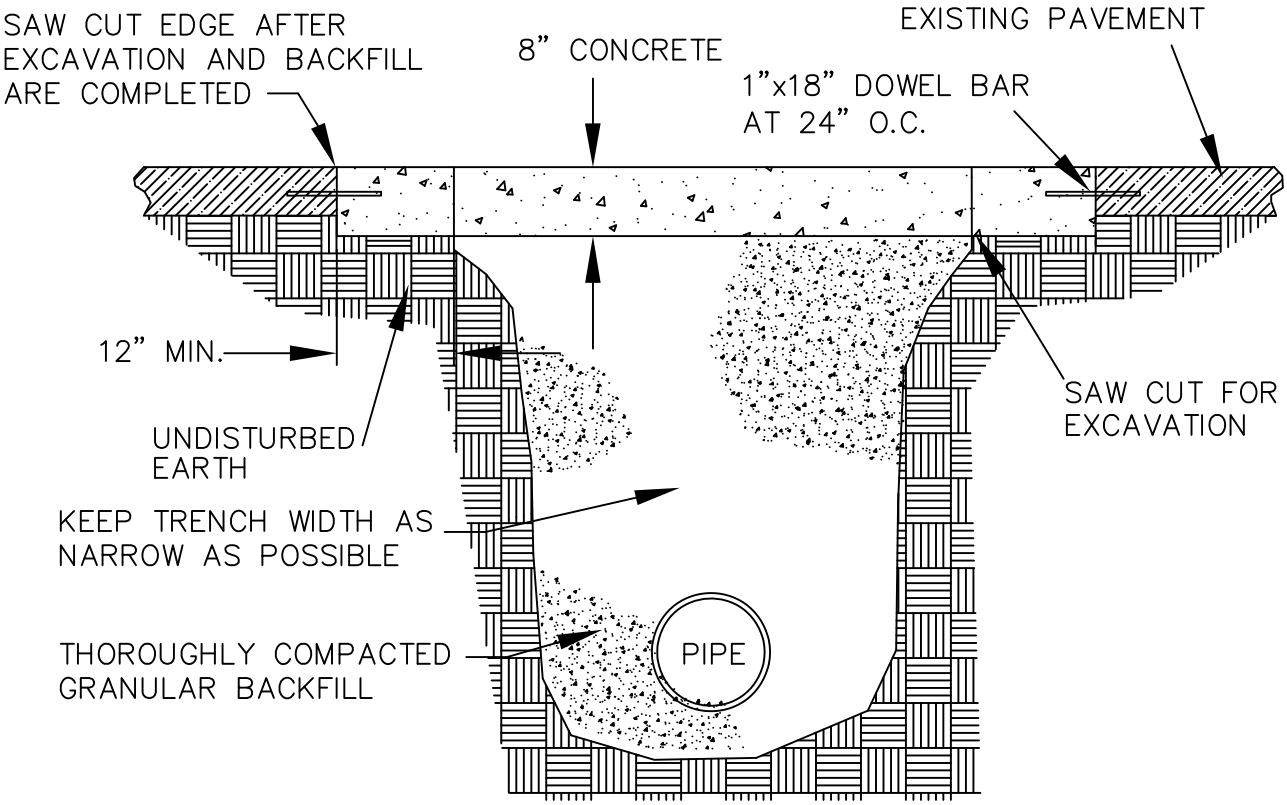

NOTES:

*OMIT DOWEL BARS WHEN REPAIRING ASPHALT PAVEMENT

*REPAIR SHALL CONFORM TO ALL CONSTRUCTION JOINT REQUIREMENTS

DEPARTMENT OF PUBLIC WORKS SPRINGFIELD, MO.	EXISTING PAVEMENT REPAIR DETAIL	ADOTPED: 7-1-2015 ST-13

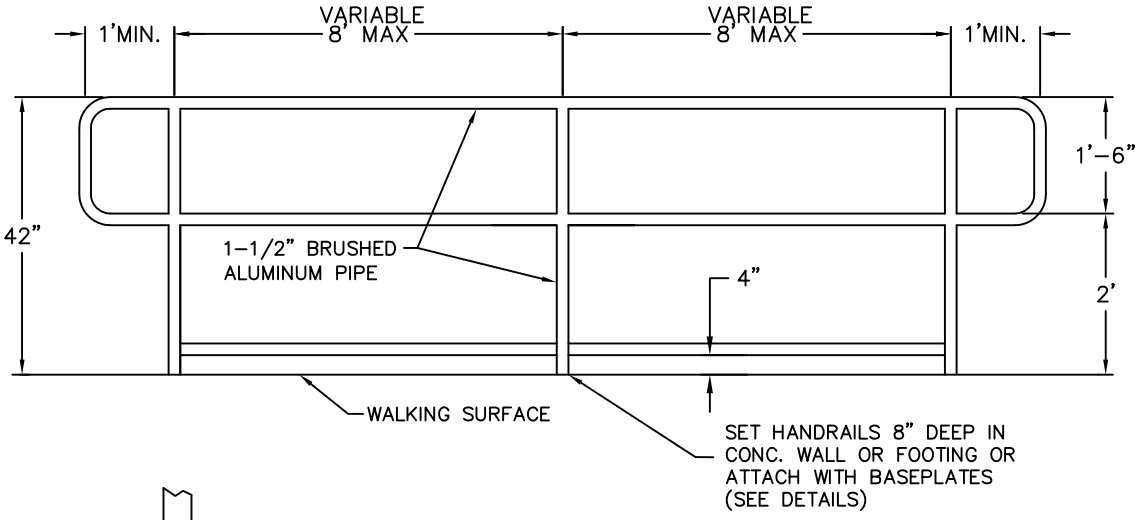

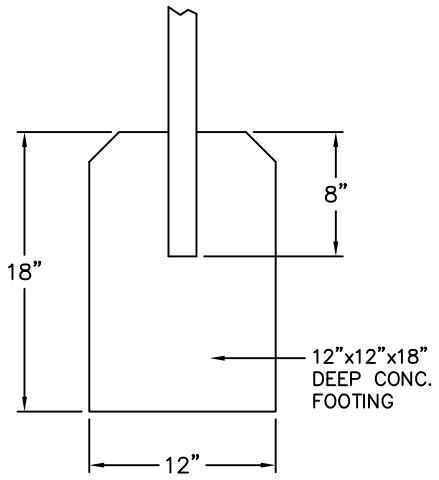

CONC. FOOTING DETAIL

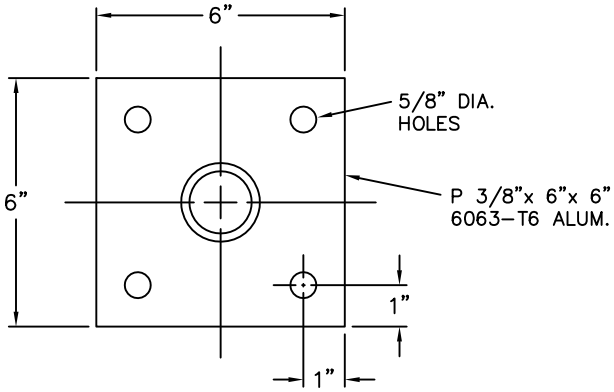

BASEPLATE DETAIL

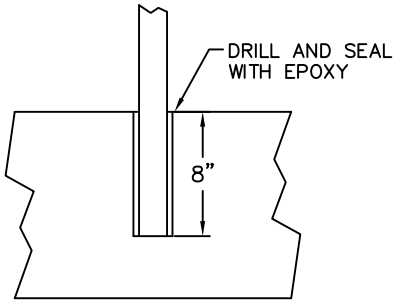

HEADWALL DETAIL

RAILING & POST SPECIFICATIONS		
TYPE	SIZE (DIA.)	WEIGHT (LBS./FT.)
ROUND	1-1/2"	ALUMINUM 0.940

GENERAL NOTES:

RAILINGS, POSTS, AND BASEPLATES SHALL BE ALUMINUM ALLOY 6061-T6 OR 6063-T6.

IF PRE-MANUFACTURED HANDRAIL COMPONENTS ARE TO BE USED, PRIOR APPROVAL IS REQUIRED.

ALL JOINTS SHALL BE CONTINUOUS WELDED.

DEPARTMENT OF PUBLIC WORKS SPRINGFIELD, MO.	HANDRAIL	REVISED: 7/1/2013
		ST-18

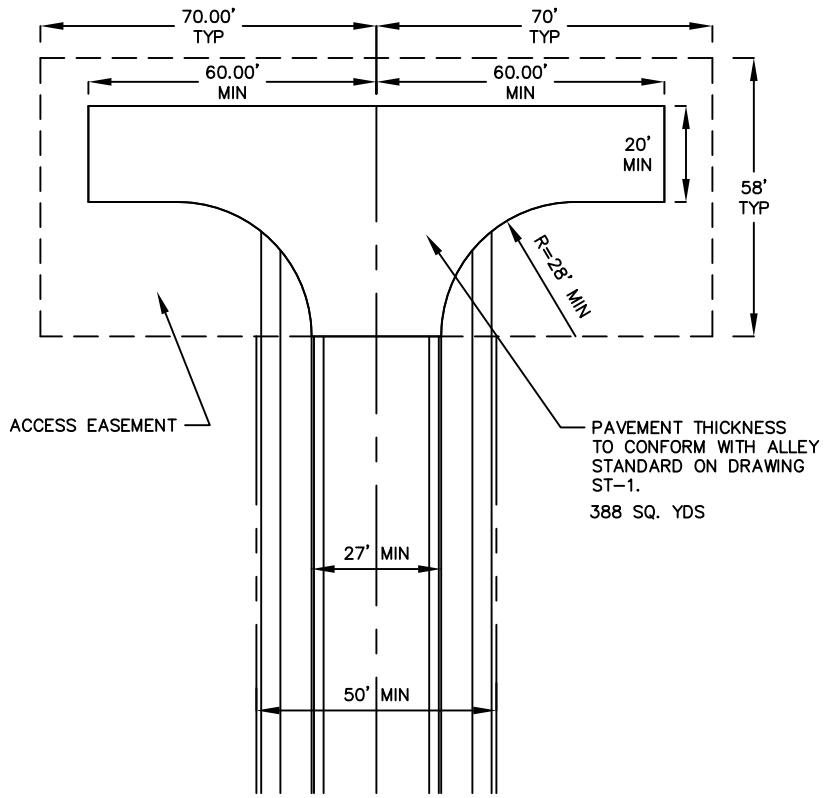

"T" TYPE

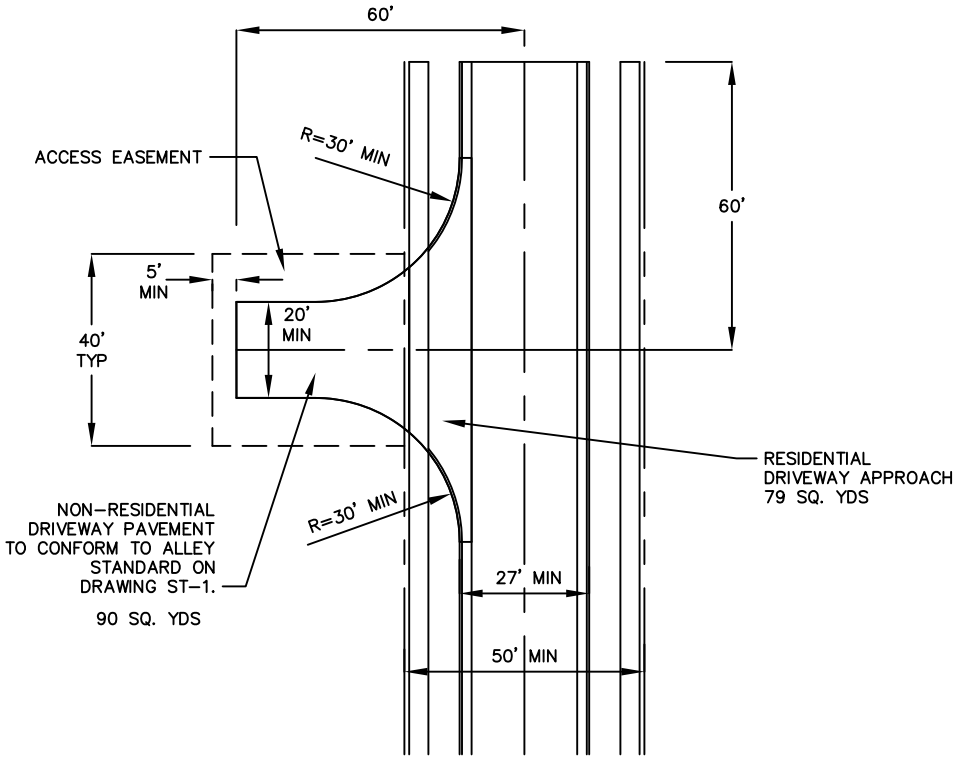

"BRANCH" TYPE

DEPARTMENT OF PUBLIC WORKS SPRINGFIELD, MO.	TEMPORARY DEAD END STREET TURNAROUND	ADOPTED: DRAFT ST-19

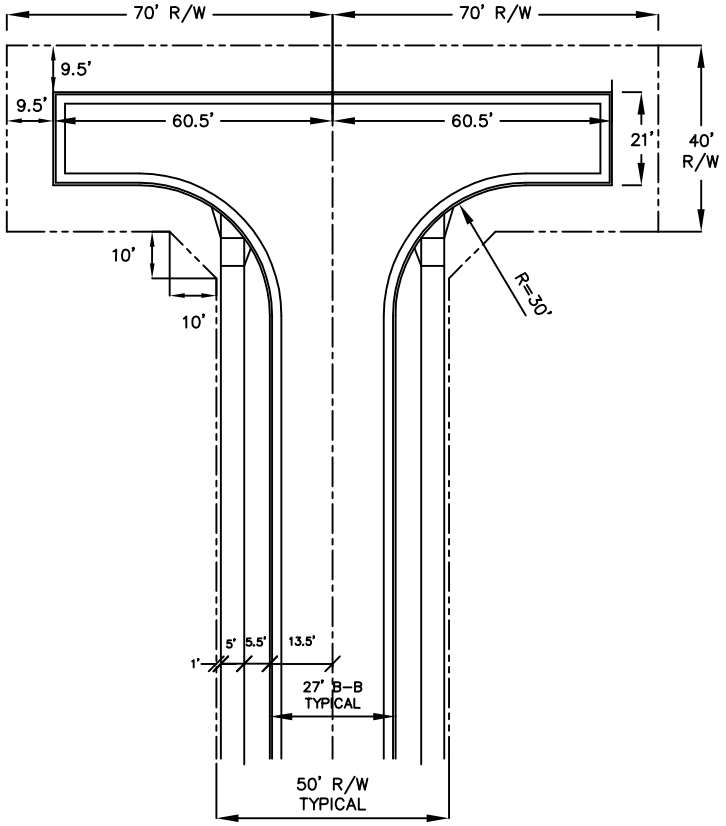

" T " TYPE

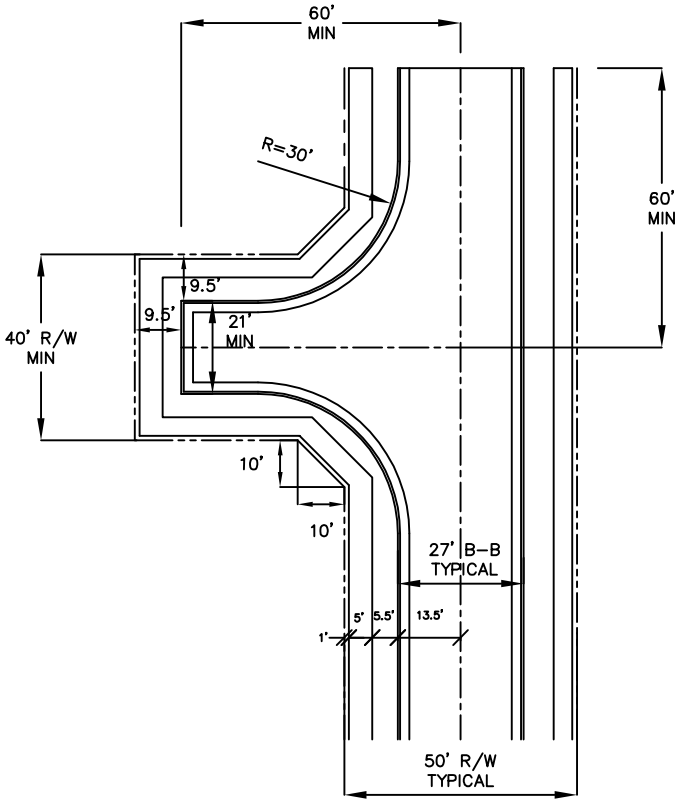

" BRANCH " TYPE

DEPARTMENT OF PUBLIC WORKS SPRINGFIELD, MO.	PERMANENT DEAD END STREET TURNAROUND	REVISED: 3/21/2016 ST-20

CONVENTIONAL SIGNAL HEAD WITH BACKPLATE

OPTICALLY LIMITING SIGNAL HEAD WITH BACKPLATE

PEDESTRIAN SIGNAL HEAD

EXISTING SIGNAL HEAD

OVERHEAD OR SHAFT MOUNTED SIGN

LUMINAIRE

CONTROLLER

(FRONT DOOR OF CABINET)

S SPLICE CABINET

PULL BOX

CONCRETE BASE

POWER SUPPLY

PEDESTRIAN PUSHBUTTON

STOP LINE

LANE USE

MAST ARM W/SIGNAL HEAD & LUMINAIRE

INDUCTION LOOP DETECTOR

VIDEO IMAGE DETECTOR

RADAR DETECTOR

R	RED BALL*
Y	YELLOW BALL*
G	GREEN BALL*
YL	YELLOW LEFT ARROW*
L	GREEN LEFT ARROW*
W	WALK (MAN SYMBOL)
DW	DON'T WALK (HAND SYMBOL)
	EXISTING CONTROLLER
S	EXISTING SPLICE CABINET
	EXISTING PULL BOX
	EXISTING CONCRETE BASE
21	SIGNAL FACE NUMBER
2	POST NUMBER
21	DETECTOR NUMBER
2	PULL BOX NUMBER

EXISTING MAST ARM

CONDUIT

BORED CONDUIT

EXISTING CONDUIT

4" PVC	SIZE & TYPE OF CONDUIT
2-16C#12	NUMBER, CONDUCTORS, & AWG SIZE OF CABLE

* - ALL 12" LENS WITH TUNNEL VISOR

NOT TO SCALE

DEPARTMENT OF PUBLIC WORKS SPRINGFIELD, MO.	**SIGNAL SYMBOLS**	ADOPTED: TS-1

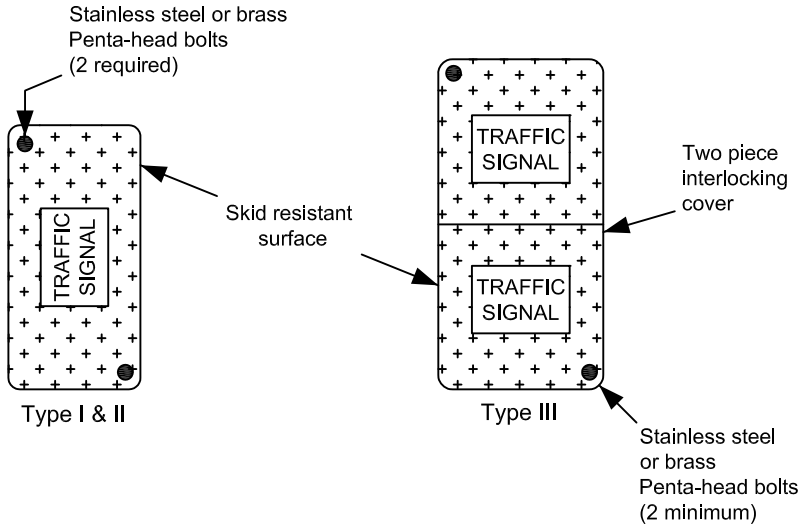

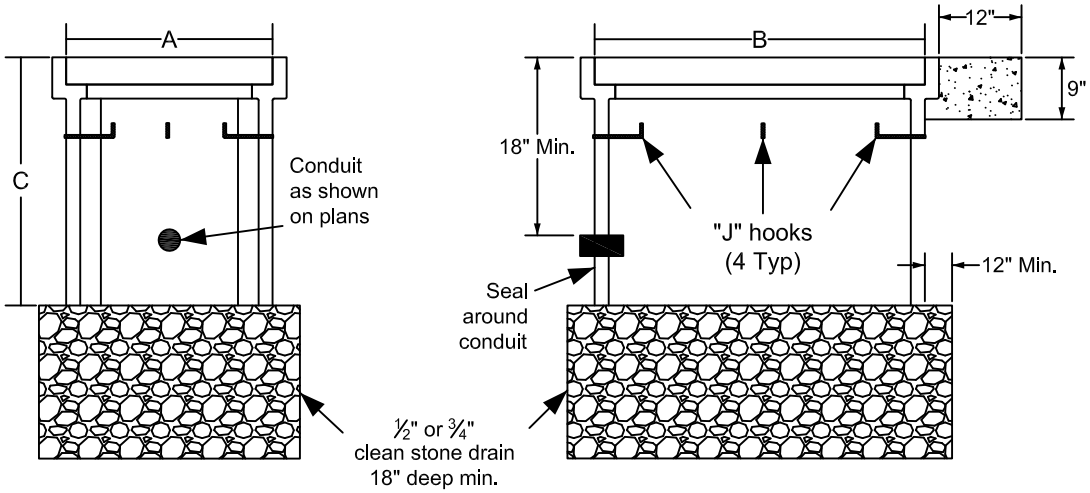

	DIMENSIONS		
	TYPE I	TYPE II	TYPE III
A	17"	24"	30"
B	30"	36"	48"
C	24"	24"	36"

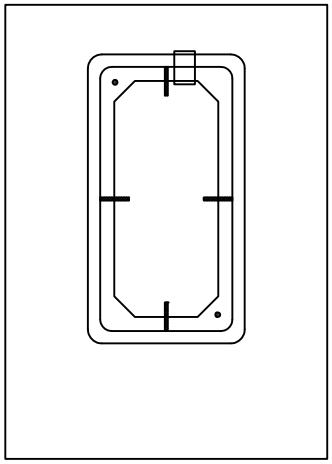

9" Thick concrete
pad 12" all sides

Notes:
1. Preformed pull boxes shall be used unless otherwise specified on the plans.

2. Lift opening is required on all covers.

3. All demensions are nominal.

4. If extensions are needed, they shall be compatable and from the same manufacturer.

NOT TO SCALE

DEPARTMENT OF PUBLIC WORKS SPRINGFIELD, MO.	**PREFORMED PULL BOXES**	ADOPTED: TS-2

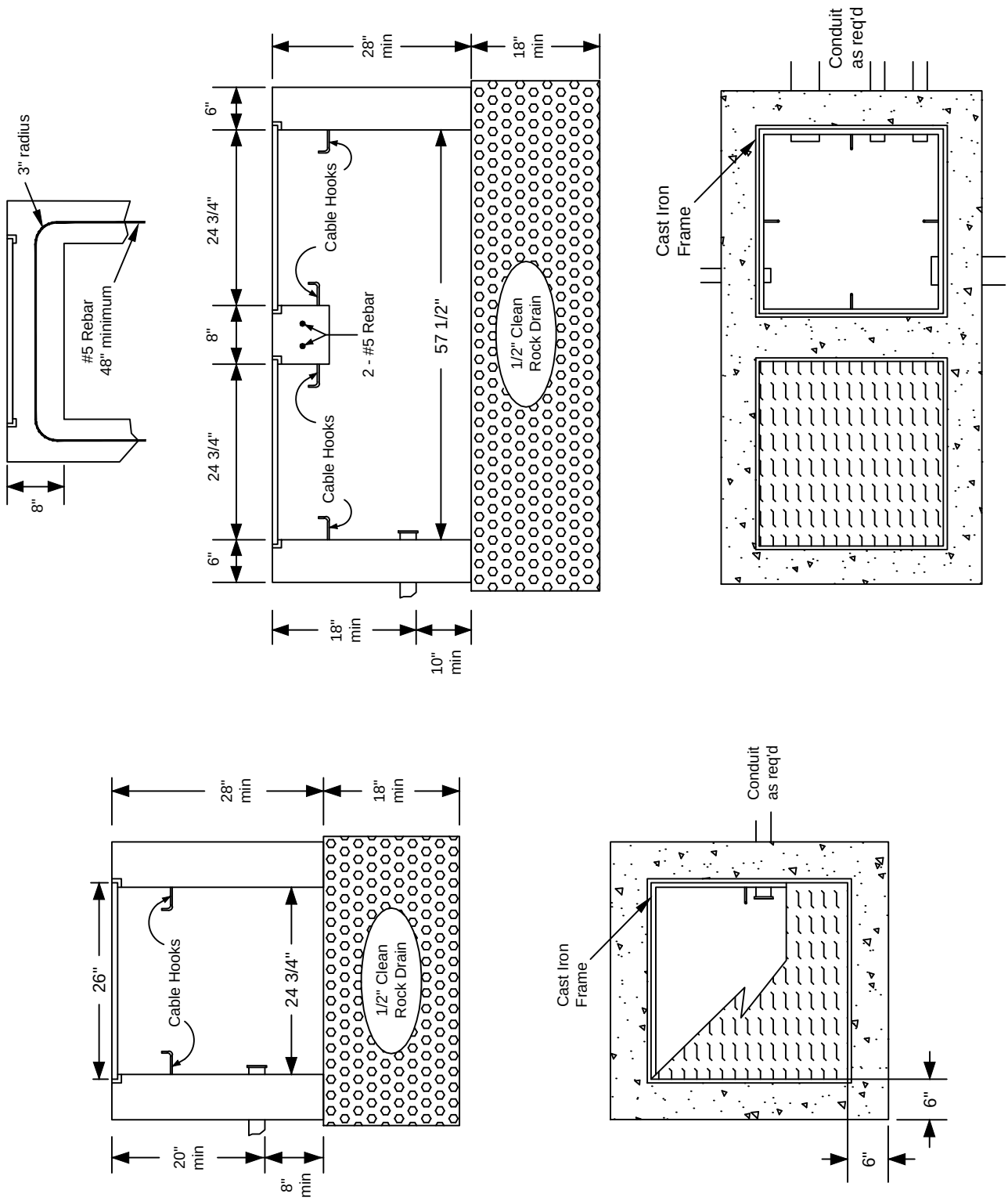

NOT TO SCALE

DEPARTMENT OF PUBLIC WORKS SPRINGFIELD, MO.	**CAST-IN-PLACE PULL BOX**	ADOPTED: TS-3

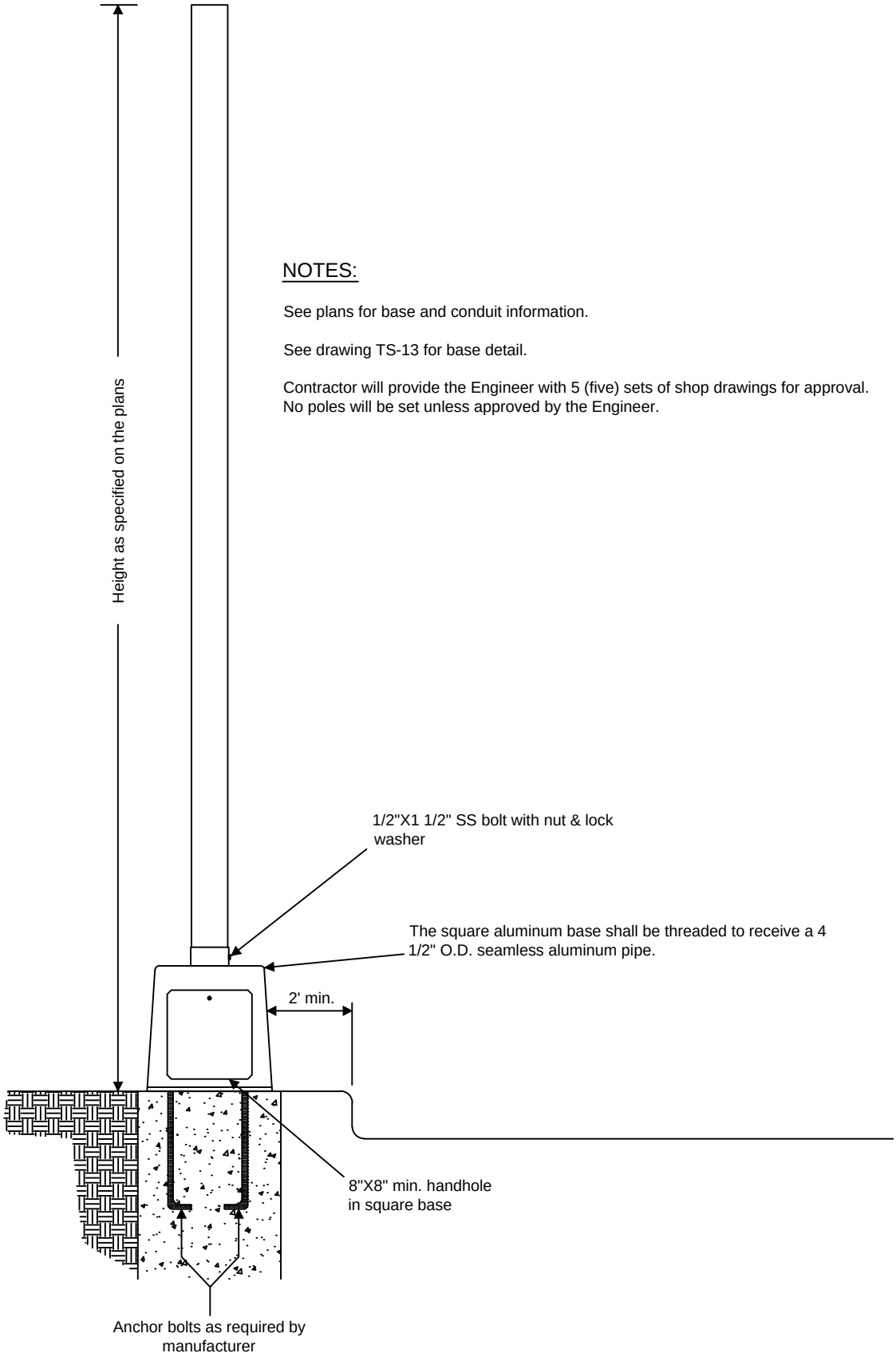

NOTES:

See plans for base and conduit information.

See drawing TS-13 for base detail.

Contractor will provide the Engineer with 5 (five) sets of shop drawings for approval. No poles will be set unless approved by the Engineer.

NOT TO SCALE

DEPARTMENT OF PUBLIC WORKS SPRINGFIELD, MO.	**ALUMINUM PEDESTAL**	ADOPTED: TS-4

TYPE A

See plans for arm length and signal spacing details

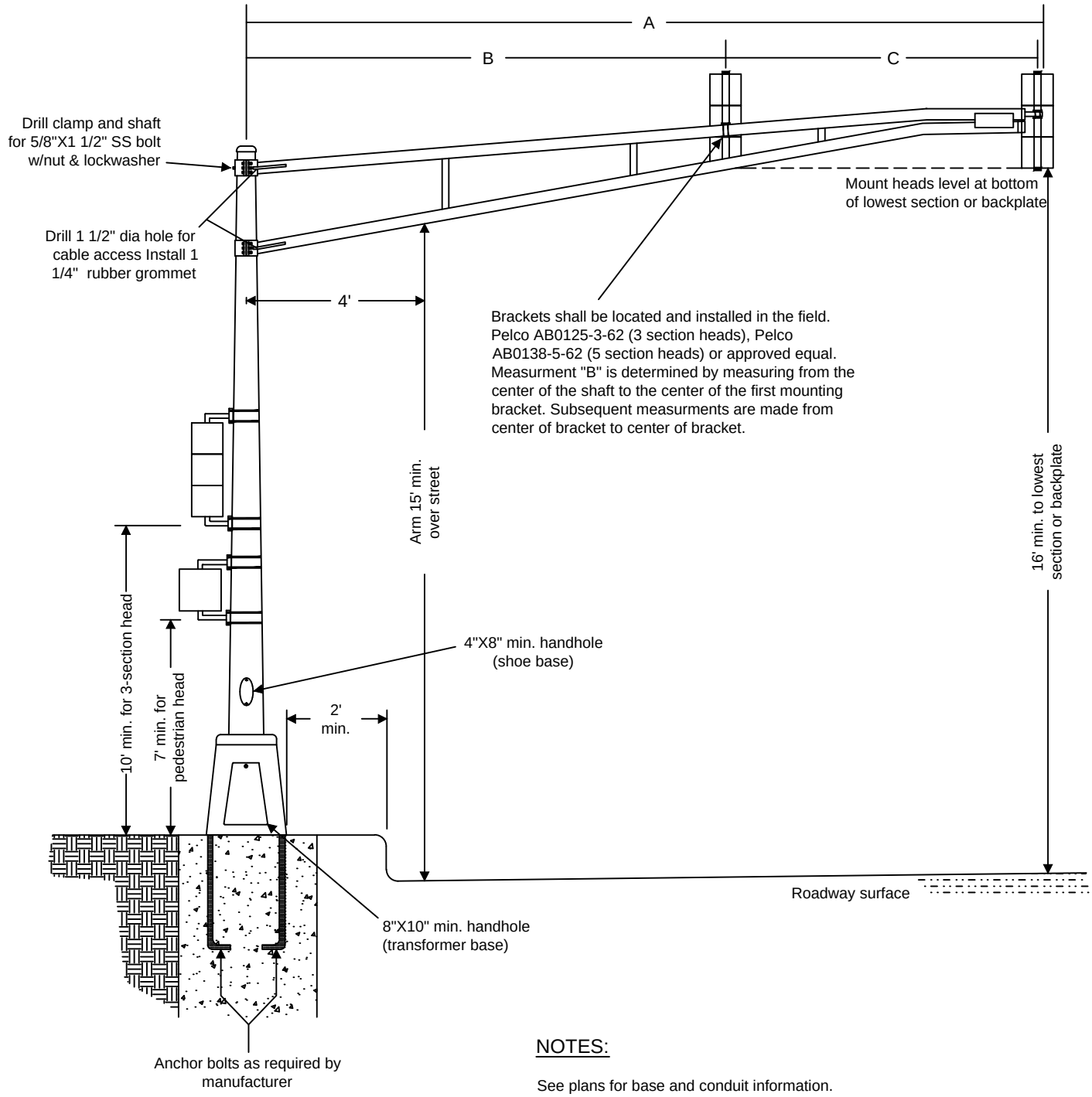

NOTES:

See plans for base and conduit information.

A transformer base will be provided with Mast Arms 25' or less in length. Mast arms greater than 25' require shafts equiped with a shoe base.

Contractor will provide the Engineer with 5 (five) sets of shop drawings for approval. No poles will be set unless approved by the Engineer.

NOT TO SCALE

DEPARTMENT OF PUBLIC WORKS SPRINGFIELD, MO.	**ALUMINUM MAST ARM**	ADOPTED:
		TS-5

TYPE S

See plans for arm length and signal spacing details

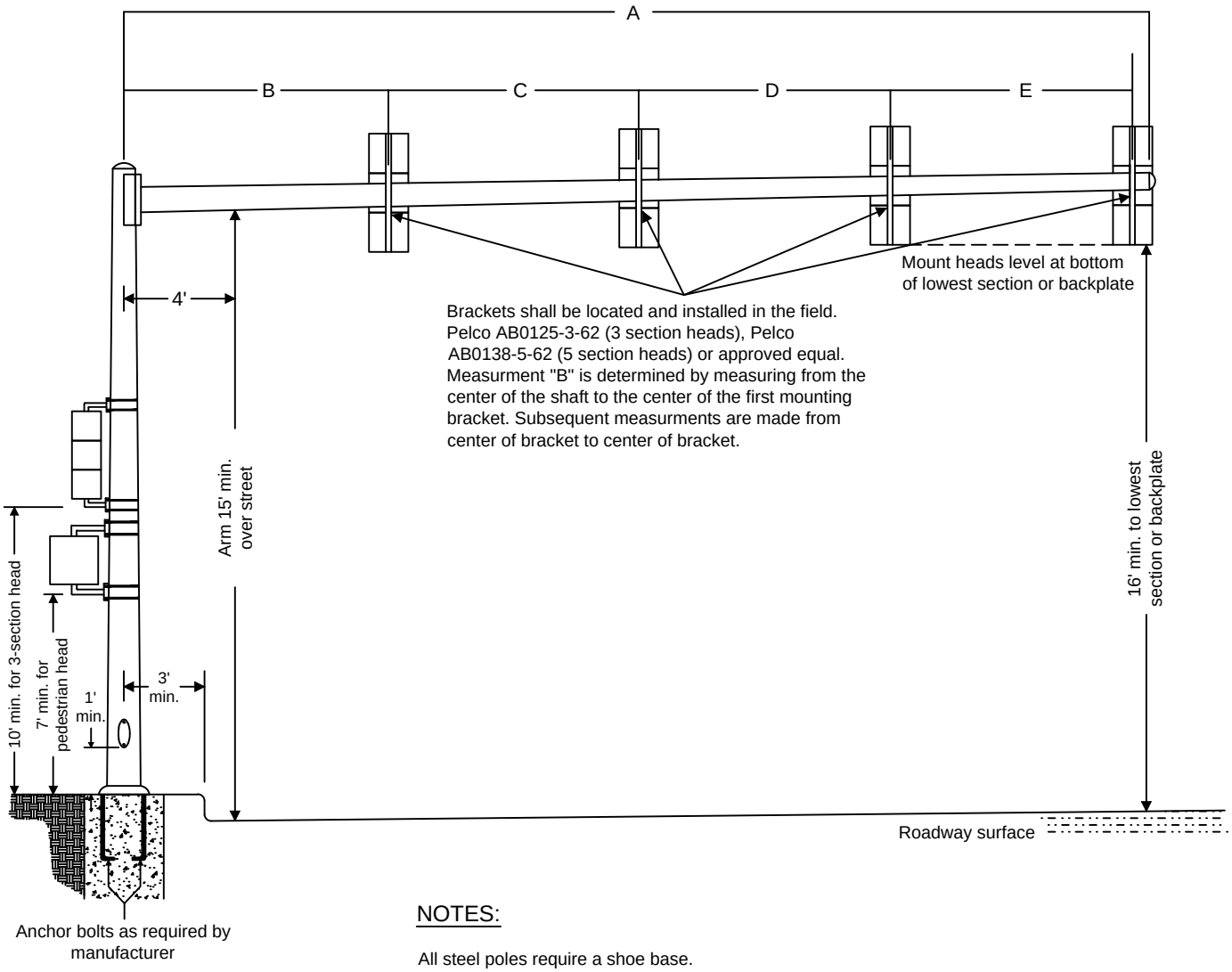

NOTES:

All steel poles require a shoe base.

See plans for base and conduit information.

Contractor will provide the Engineer with 5 (five) sets of shop drawings for approval. No poles will be set unless approved by the Engineer.

NOT TO SCALE

DEPARTMENT OF PUBLIC WORKS SPRINGFIELD, MO.	**STEEL MAST ARM**	ADOPTED:
		TS-6

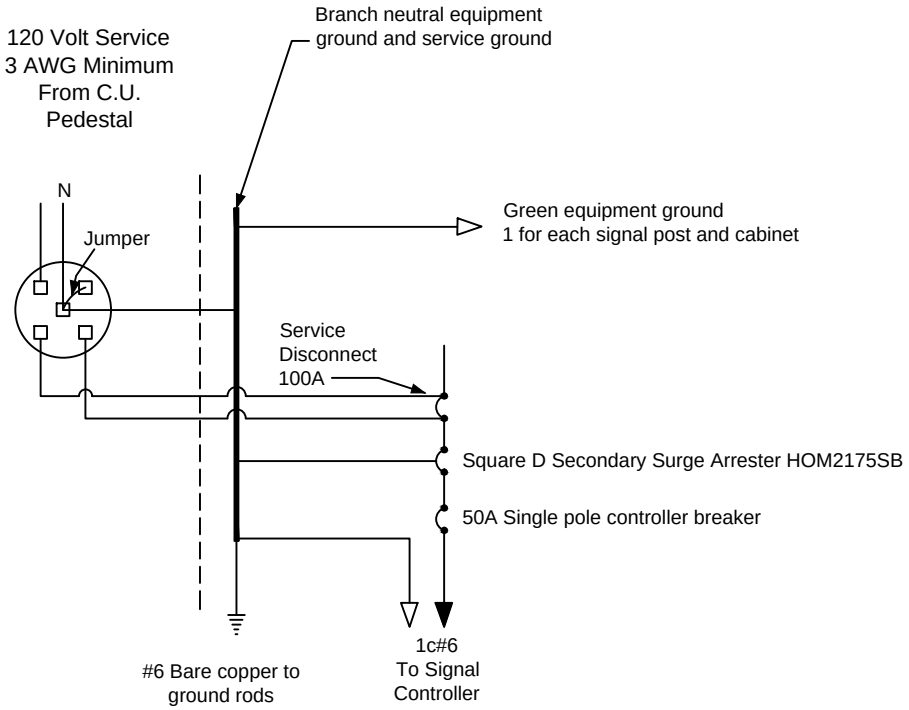

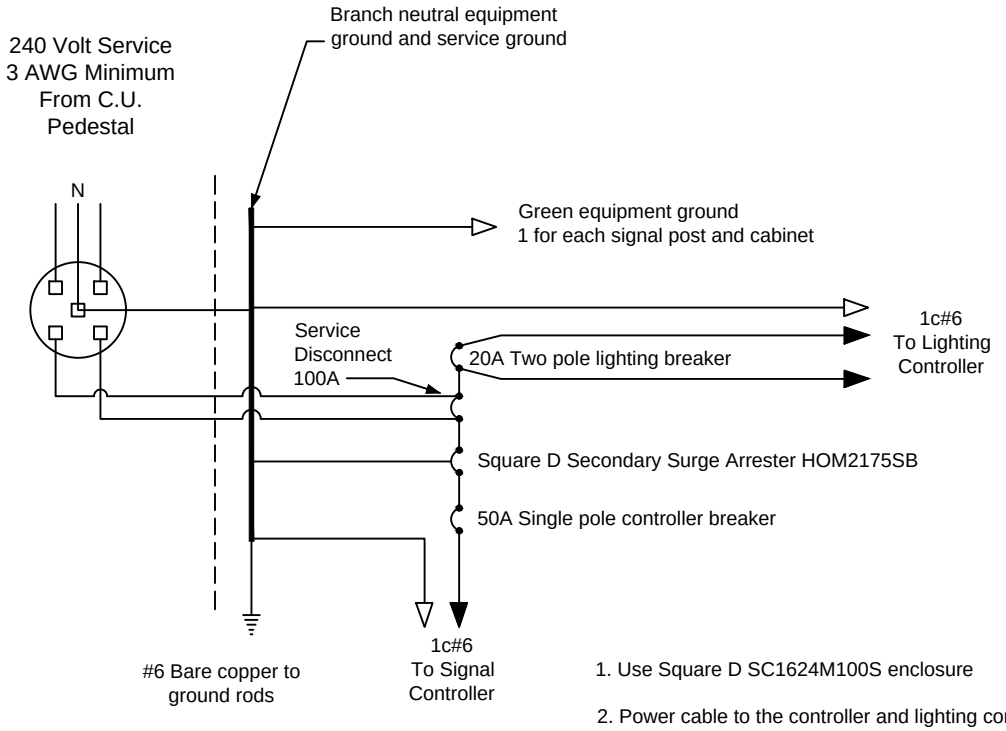

1. Use Square D SC1624M100S enclosure

2. Power cable to the controller and lighting controller shall be black and one white neutral - do not mark with tape.

NOT TO SCALE

DEPARTMENT OF PUBLIC WORKS SPRINGFIELD, MO.	**POWER SUPPLY WIRING**	ADOPTED: TS-7

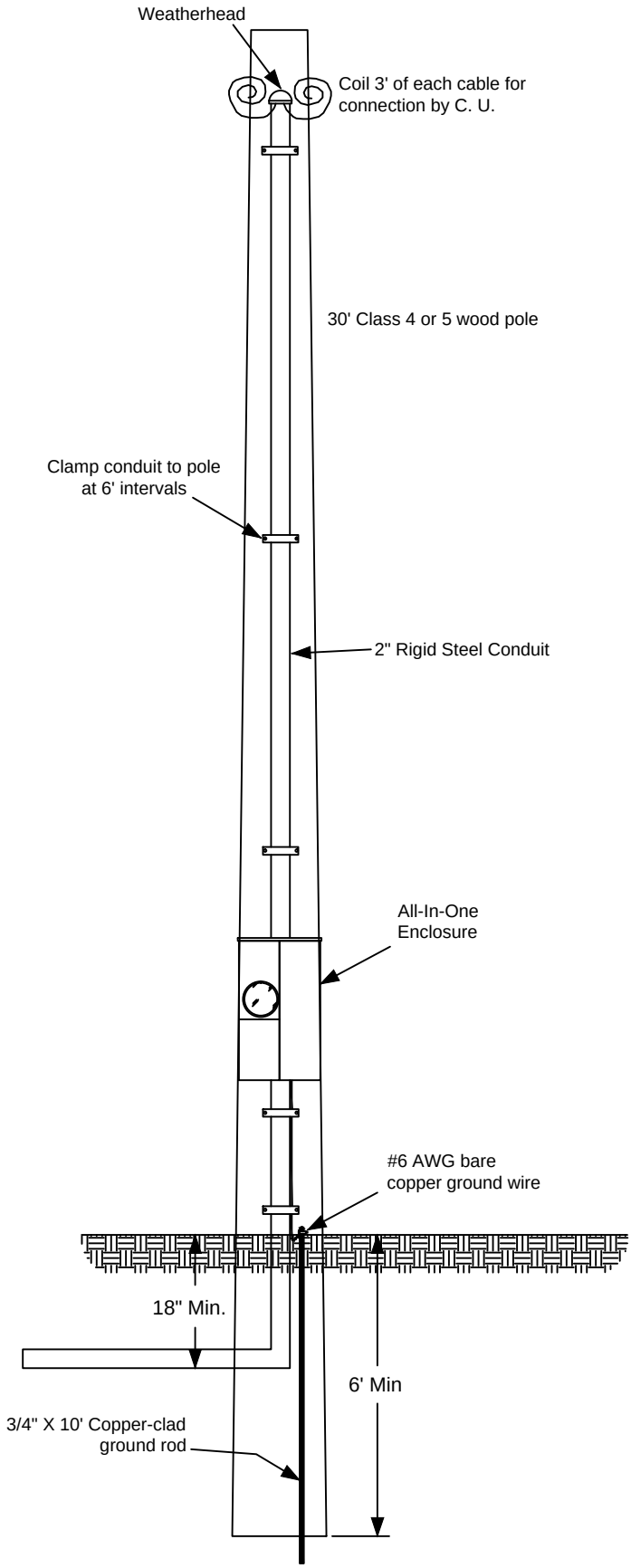

NOT TO SCALE

DEPARTMENT OF PUBLIC WORKS SPRINGFIELD, MO.	**TYPE I POWER SUPPLY**	ADOPTED: TS-8

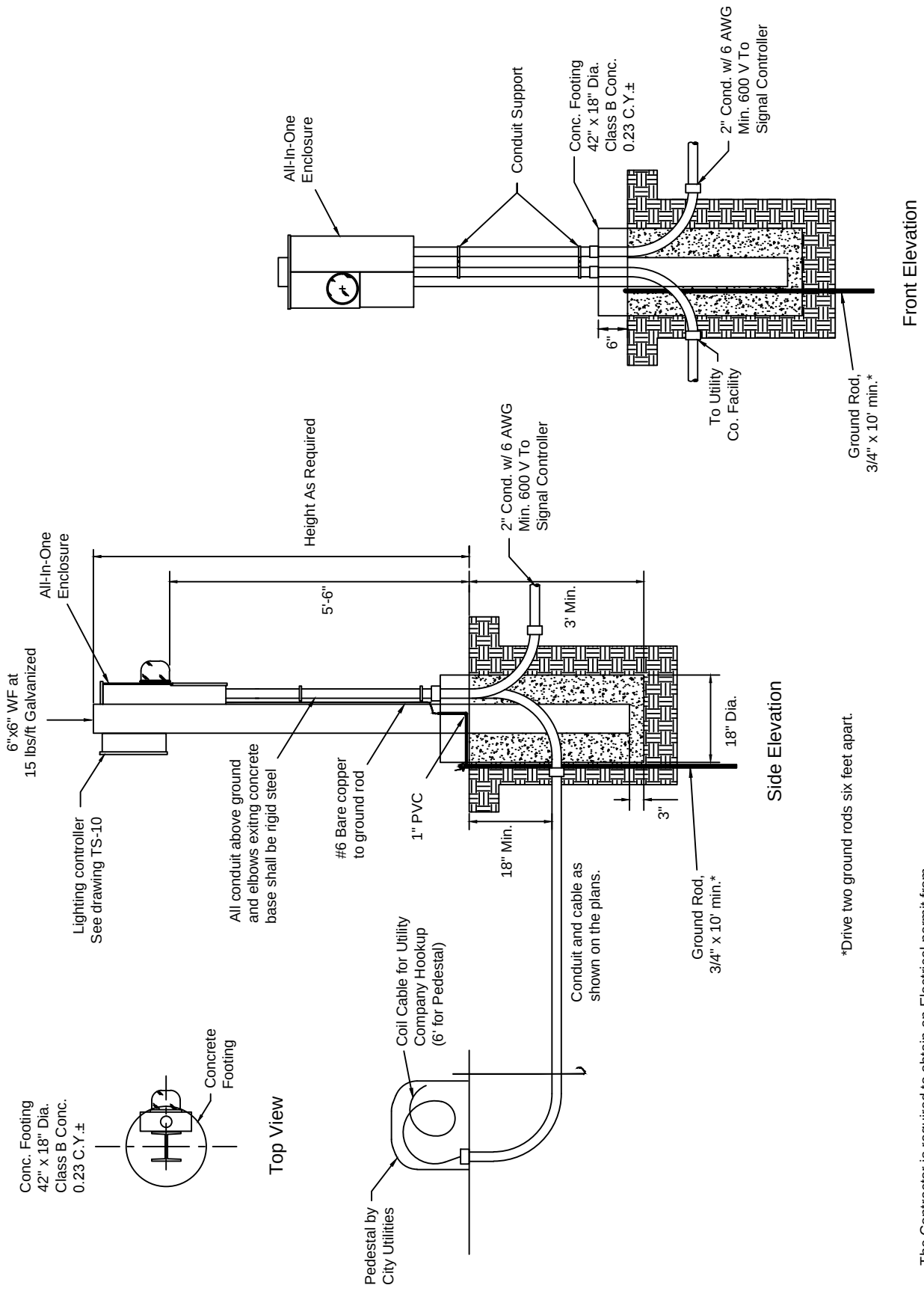

The Contractor is required to obtain an Electrical permit from Building Development Services for new or relocated power supplies. The permit fee is the responsibility of the Contractor.

NOT TO SCALE

DEPARTMENT OF PUBLIC WORKS SPRINGFIELD, MO.	**TYPE II POWER SUPPLY**	ADOPTED:
		TS-9

DEPARTMENT OF PUBLIC WORKS
SPRINGFIELD, MO.

TYPE III POWER SUPPLY

ADOPTED:
TS-9A

NOT TO SCALE

Cabinet Requirements:
120/240 VAC, 1-Phase, 3-wire; 100 AMPS Maximum; Rainproof -Type 3R, Aluminum Enclosure, unpainted bare

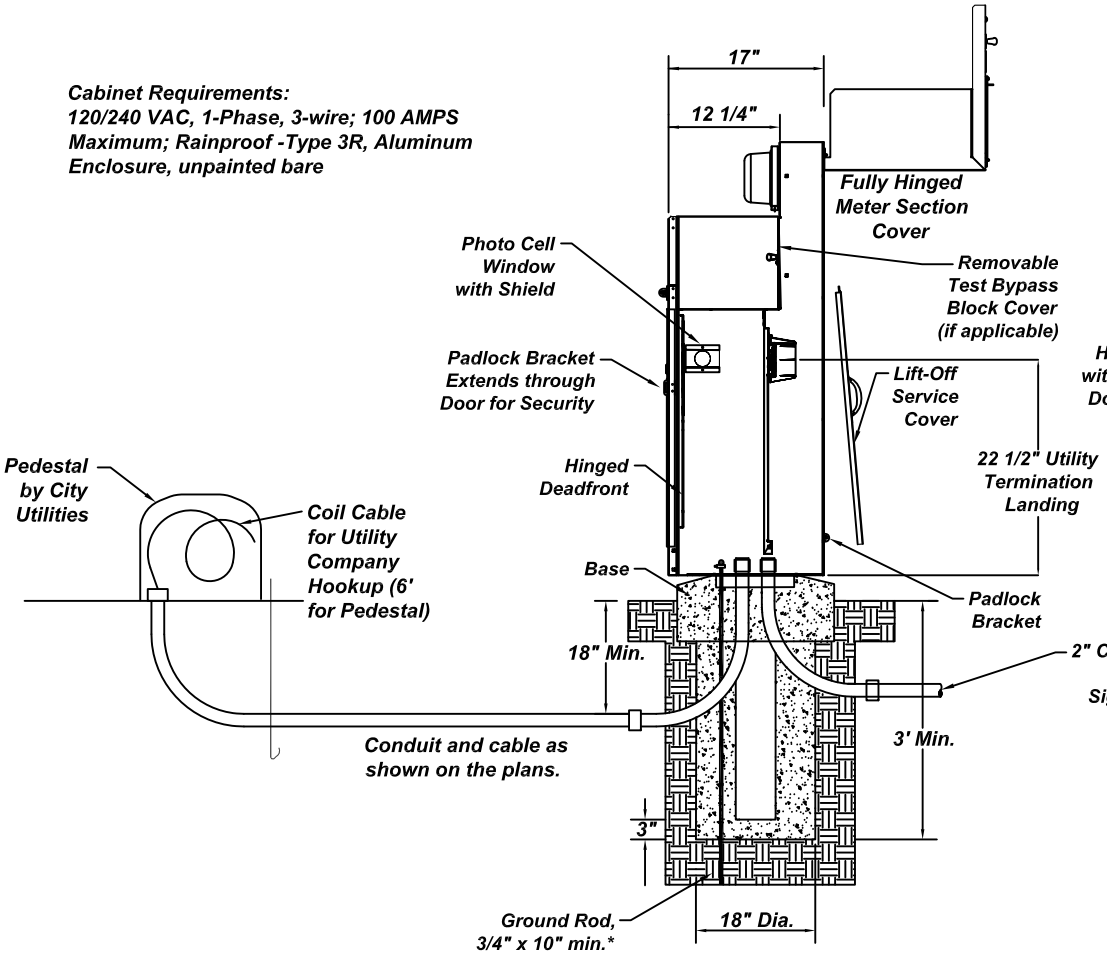

SIDE ELEVATION

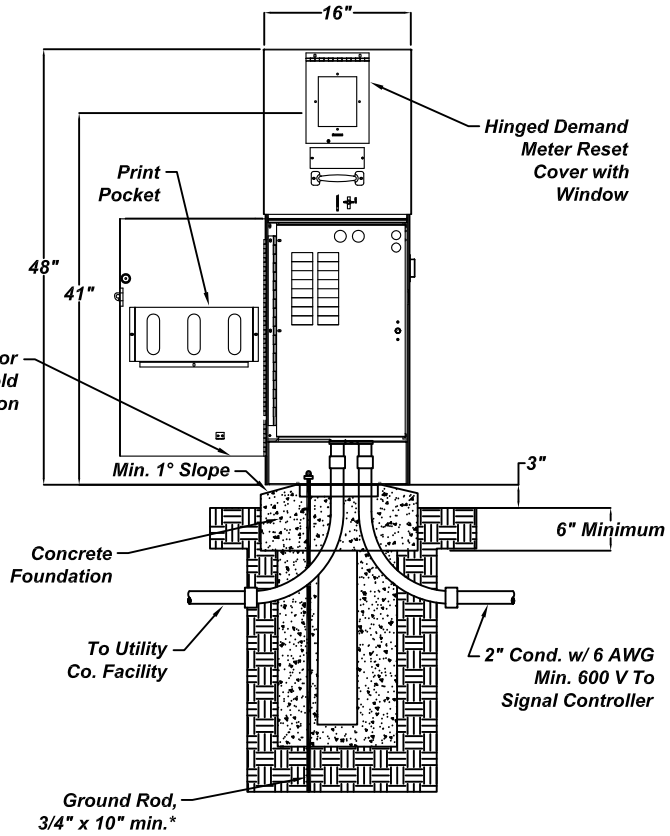

FRONT ELEVATION

*Drive two ground rods six feet apart.

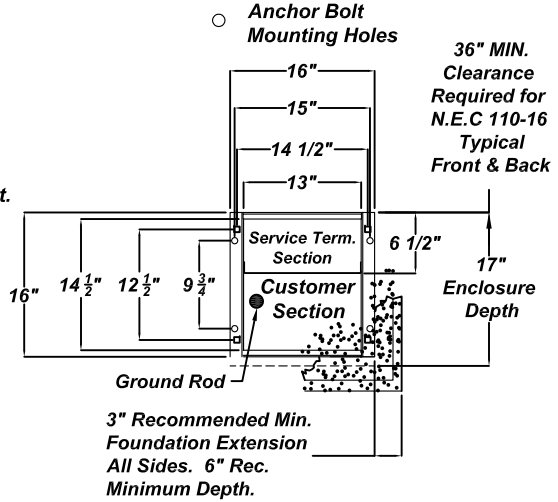

MOUNTING BASE DETAIL

3" Recommended Minimum Foundation Extension All Sides

6" Recommended Minimum Foundation Depth Below Grade Level

36" Minimum Pedestal Clearance Typical Front and Back Required per N.E.C. 110-16

(4) 5/8-11 X 18" (450MM 16 UNC) Anchor Bolts Recommended

The Contractor is required to obtain an Electrical permit from Building Development Services for new or relocated power supplies. The permit fee is the responsibility of the Contractor.

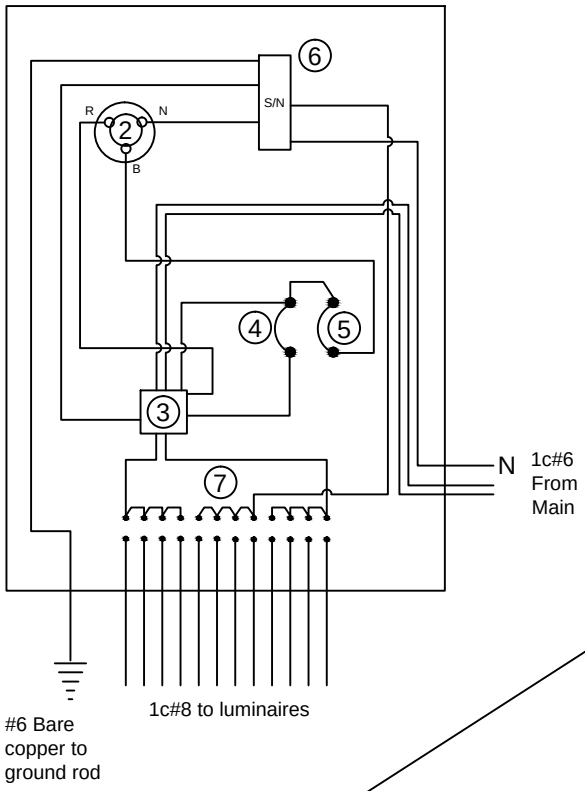

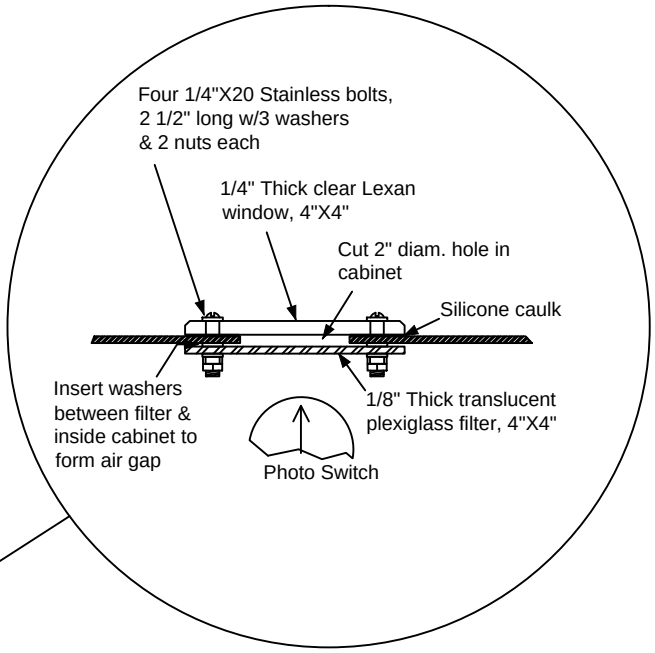

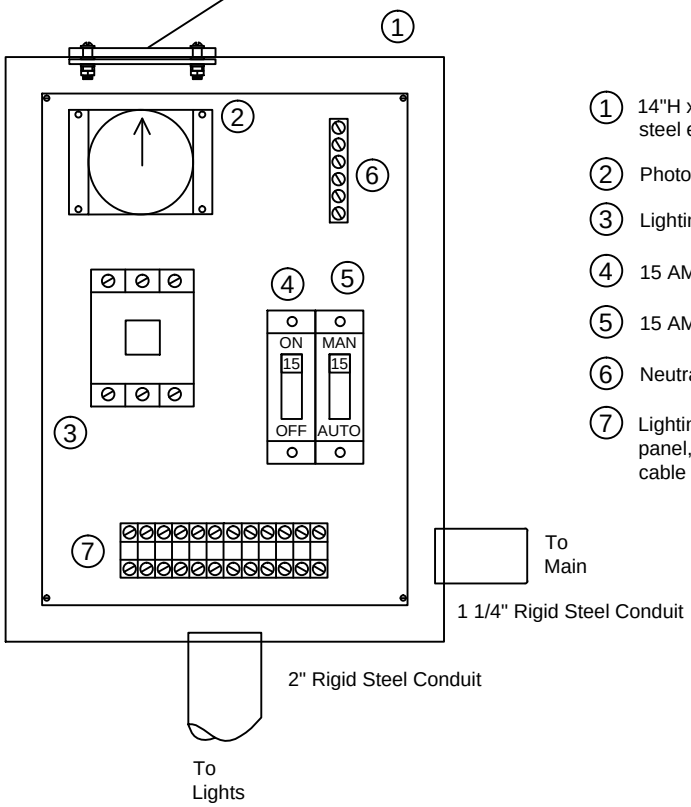

1. 14"H x 12"W x 6"D 14 Ga. watertight aluminum or stainless steel enclosure
2. Photoelectric Switch & Socket, 240V
3. Lighting Contactor, 2 Pole, 60 Amp, 240 V
4. 15 AMP single pole Control Breaker, 240 V
5. 15 AMP single pole Auto-Manual Switch, 240 V
6. Neutral Terminal Strip
7. Lighting Terminal Block, 600V, 12 position, insulated from back panel, barrier between each terminal & each end, accept #8 AWG cable

NOT TO SCALE

DEPARTMENT OF PUBLIC WORKS SPRINGFIELD, MO.	**LIGHTING CONTROLLER**	ADOPTED: TS-10

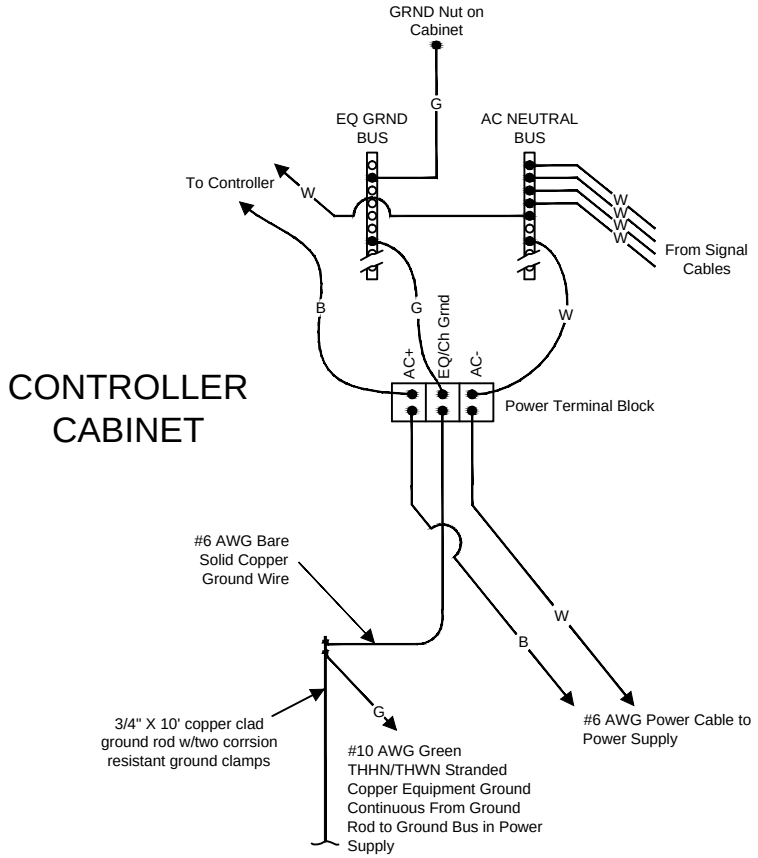

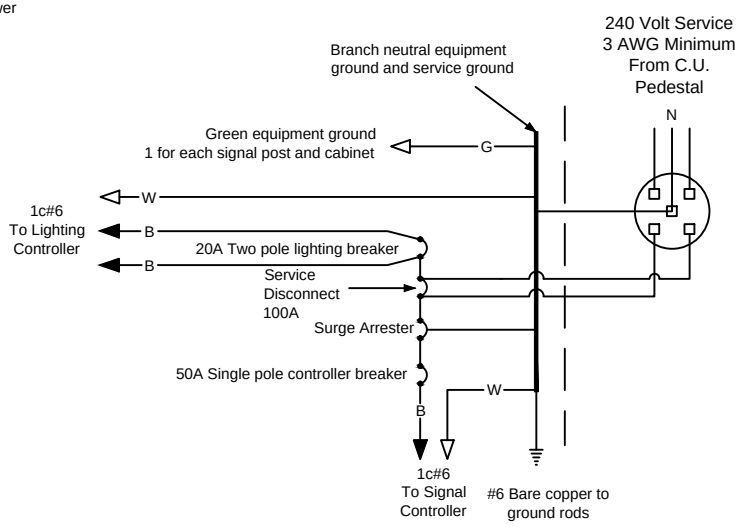

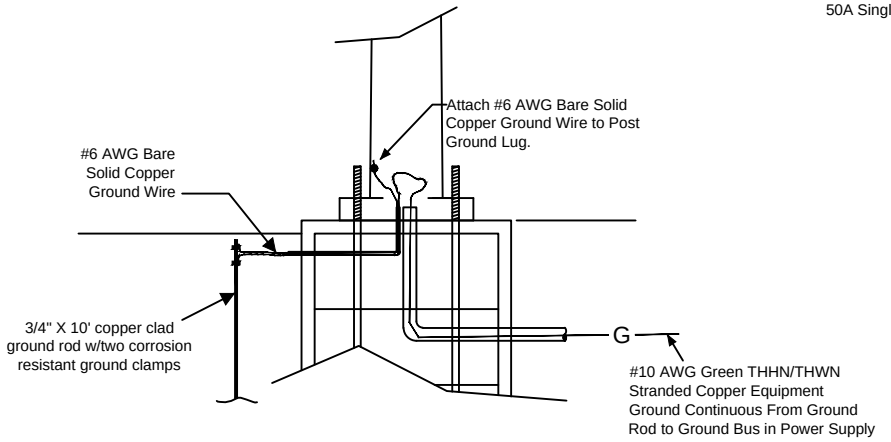

NOT TO SCALE

DEPARTMENT OF PUBLIC WORKS SPRINGFIELD, MO.	**GROUNDING AND BONDING**	ADOPTED:
		TS-11

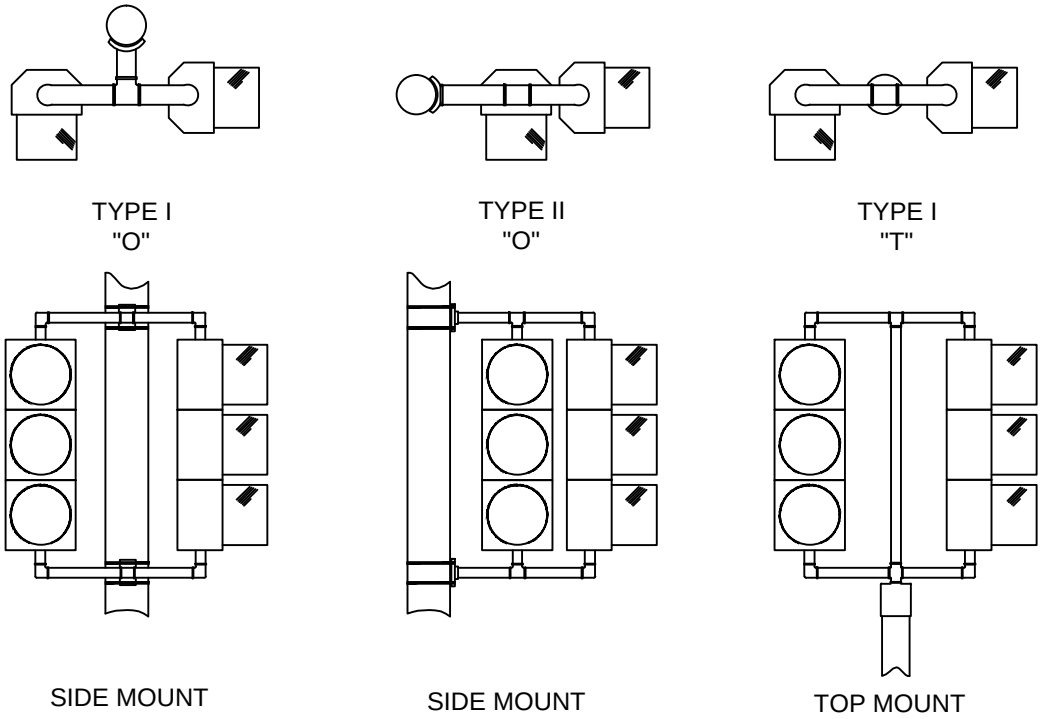

TWO WAY BRACKETS

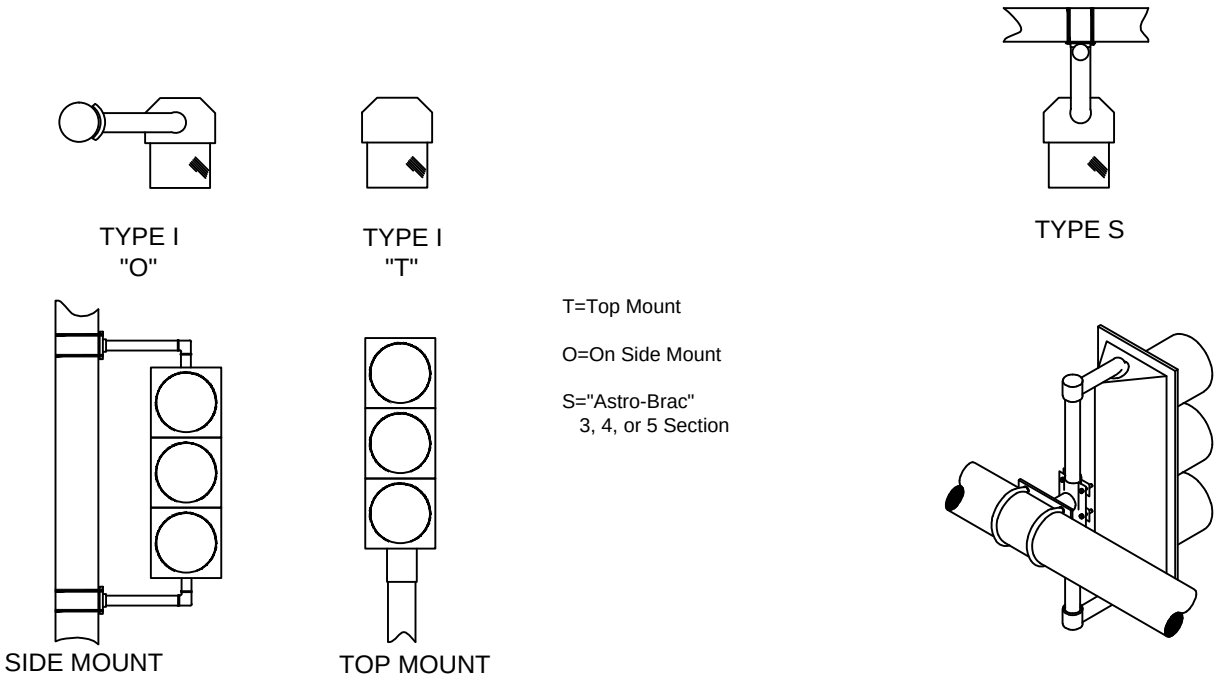

T=Top Mount

O=On Side Mount

S="Astro-Brac"
3, 4, or 5 Section

ONE WAY BRACKETS

ONE WAY BRACKETS

SIDE MOUNT Type I and Type II brackets are atttached to mast arm poles and 10' or 14' pedestals using stainless steel banding.
TOP MOUNT Type I and Type II brackets are attached to 10' or 14' pedestals using an appropriately sized slip fitter.

NOT TO SCALE

DEPARTMENT OF PUBLIC WORKS SPRINGFIELD, MO.	**SIGNAL HEADS**	ADOPTED: TS-12

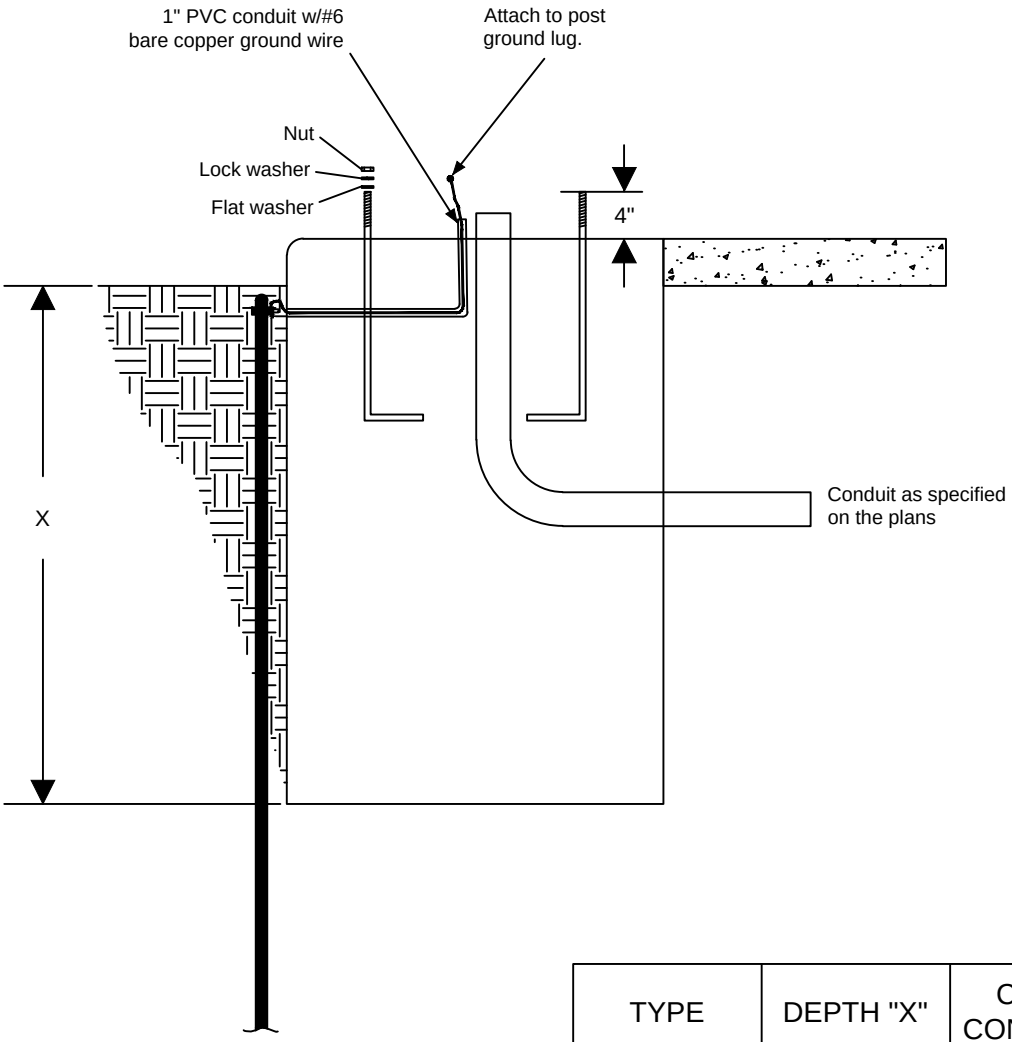

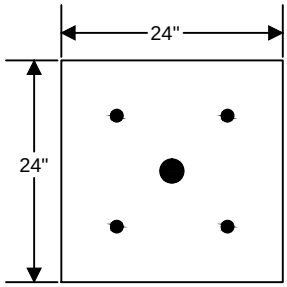

TYPE	DEPTH "X"	Cu. Yd. CONCRETE	SHAFT HEIGHT
A-3	3'	.33	10'
A-4	4'	.59	14'

TYPE "A" SIGNAL BASE NOTES

1. Anchor bolt size, anchor bolt protection, and bolt circle shall be as shown on approved pole drawings.
2. Anchor bolts and conduit shall be held rigidly in place before and during concrete placement. Anchor bolts shall be set in place by means of a template constructed to space the anchor bolts in accordance with the pattern as shown on the manufacturer's approved pole drawings. The center of the template shall correspond to the center of the base.
3. Concrete shall be consolidated by an internal vibrator.
4. Set top of base 4" above grade if in parkway away from sidewalk and form the final 12" of base square. If base is adjacent to or in sidewalk, form the final 6" of base square after the post and mast arm has been set and plumbed. Final top elevation shall match sidewalk.
5. Install preformed expansion material where base abutts sidewalk/concrete.
6. Conduits shall extend a nominal 2" above the base.

NOT TO SCALE

DEPARTMENT OF PUBLIC WORKS SPRINGFIELD, MO.	**TYPE "A" SIGNAL BASE**	ADOPTED:
		TS-13

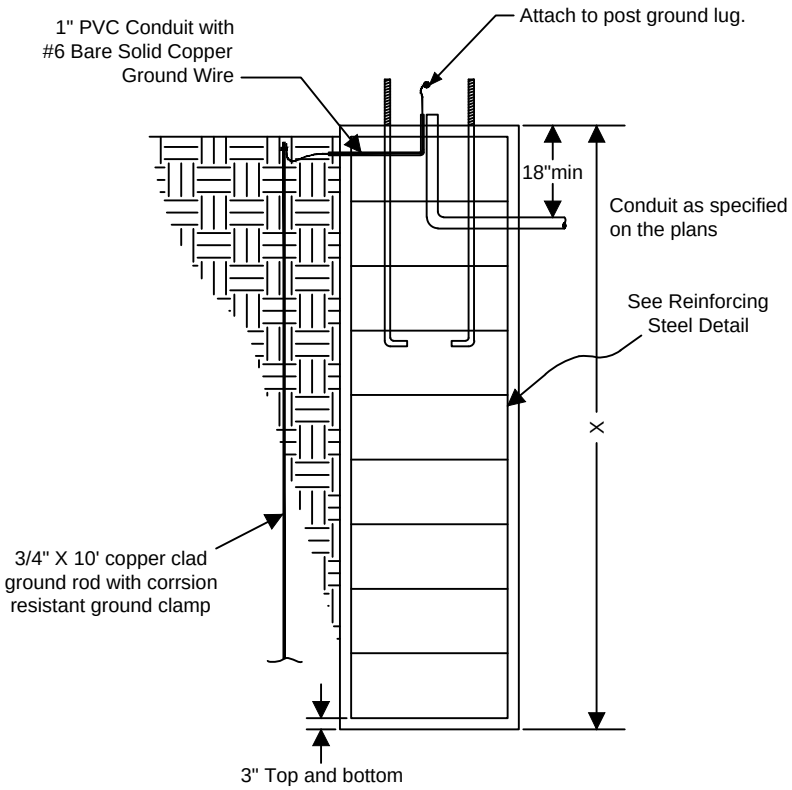

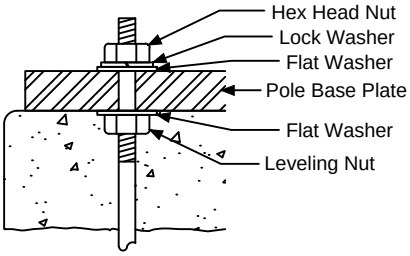

ANCHOR BOLT DETAIL

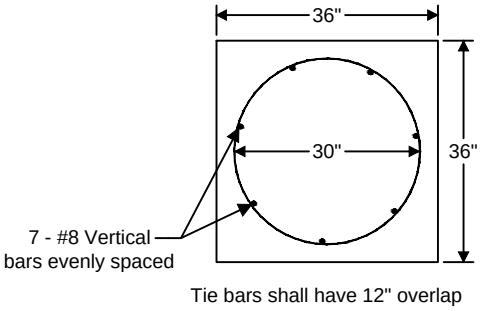

TOP VIEW

TYPE	DEPTH "X"	Cu. Yd. CONCRETE	ARM LENGTH
D-5	5'	1.38	25' or less
D-8	8'	2.16	30-35'
D-10	10'	2.69	40'-45'
D-12	12'	3.21	50'-55'

Mast arms are ordered in 5' increments.
Mast arms 60' or longer require a special base design.

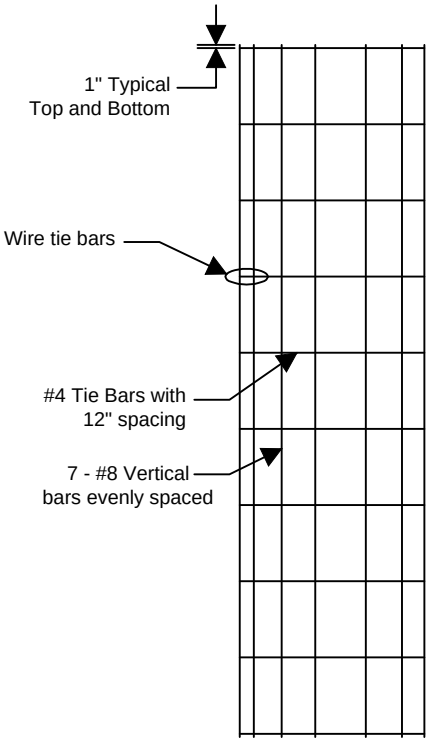

SIDE VIEW

REINFORCING STEEL DETAIL

TYPE "D" SIGNAL BASE NOTES

1. Anchor bolt size, anchor bolt protection, and bolt circle shall be as shown on approved pole drawings.
2. Anchor bolts and conduit shall be held rigidly in place before and during concrete placement. Anchor bolts shall be set in place by means of a template constructed to space the anchor bolts in accordance with the pattern as shown on the manufacturer's approved pole drawings. The center of the template shall correspond to the center of the base.
3. Concrete shall be consolidated by an internal vibrator.
4. Set top of base 4" above grade if in parkway away from sidewalk and form the final 12" of base square. If base is adjacent to or in sidewalk, form the final 6" of base square after the post and mast arm has been set and plumbed. Final top elevation shall match sidewalk.
5. Install preformed expansion material where base abutts sidewalk/concrete.
6. Conduits shall extend a nominal 2" above the base.

NOT TO SCALE

DEPARTMENT OF PUBLIC WORKS SPRINGFIELD, MO.	**TYPE "D" SIGNAL BASE**	ADOPTED:
		TS-14

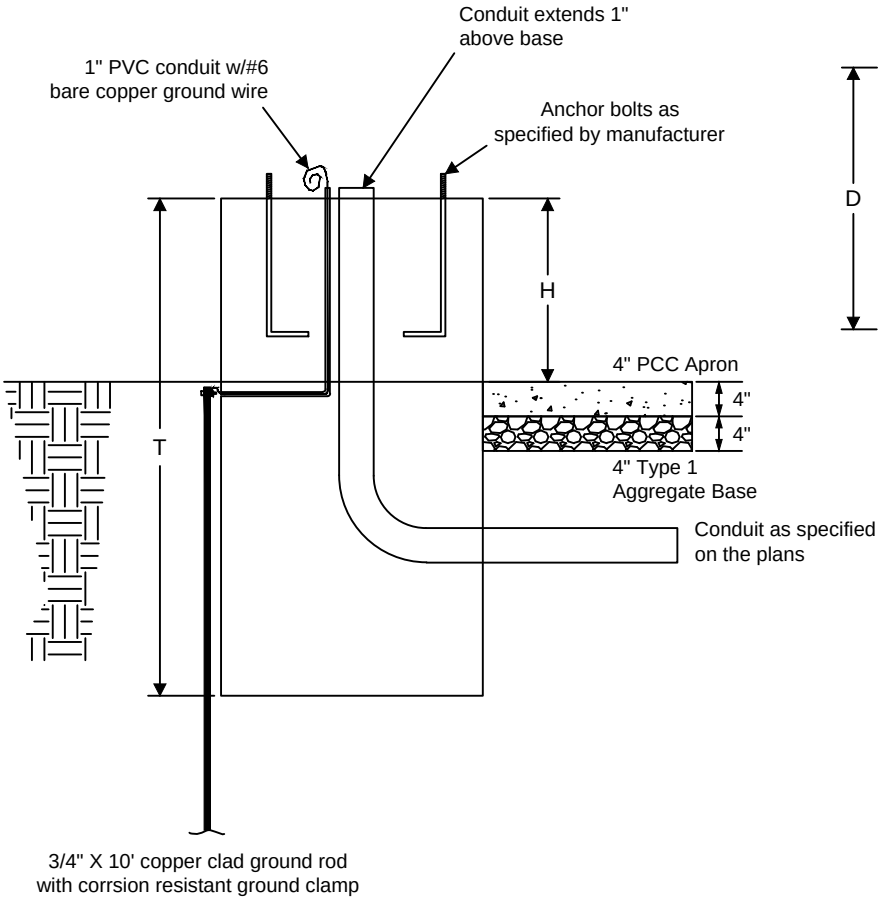

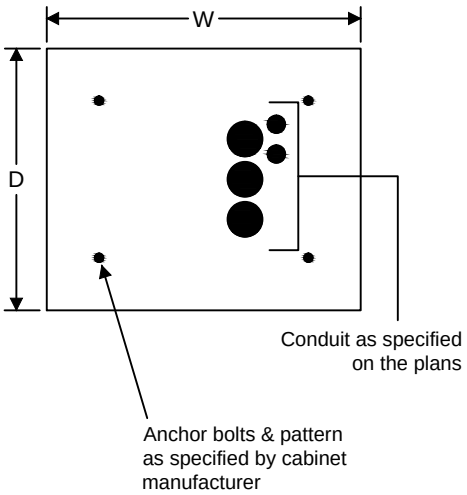

	Cubic Yards Concrete			
	B	BS	C	D
With Apron	1.83	1.70	1.65	2.57
Without Apron	1.23	1.10	1.02	1.83

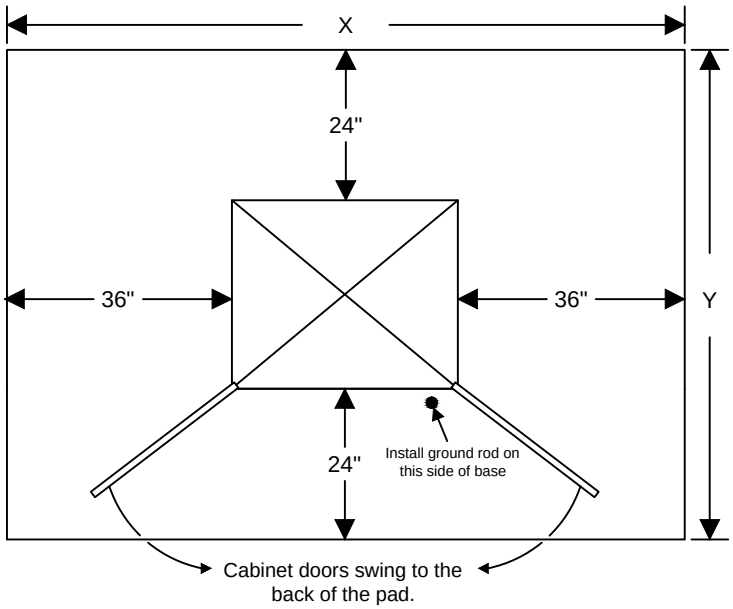

	Dimensions			
	B	BS	C	D
W	30"	30"	36"	54"
D	30"	30"	30"	36"
H	28"	21"	8"	8"
T	64"	57"	44"	44"
X	102"	102"	108"	126"
Y	78"	78"	78"	84"

NOT TO SCALE

DEPARTMENT OF PUBLIC WORKS SPRINGFIELD, MO.	**CONTROLLER BASES**	ADOPTED: TS-15

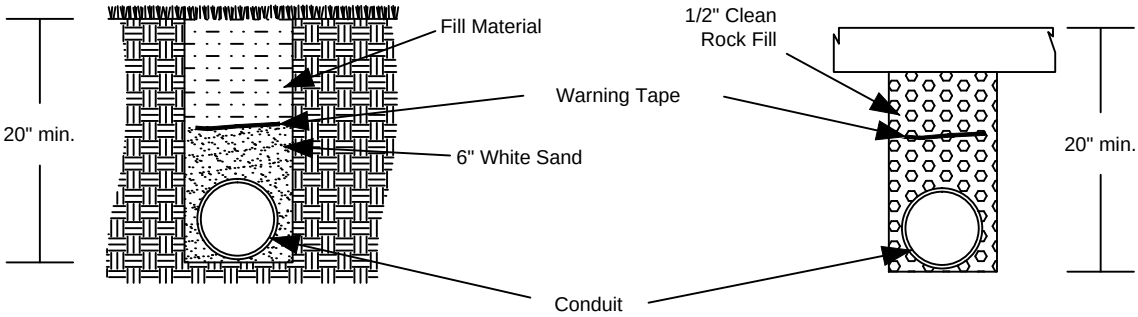

NON-PAVED SURFACE

PAVED SURFACE

NOTES:

1. All conduit in trench, except interconnect conduit, shall be Schedule 40 PVC, unless otherwise specified.

2. Interconnect conduit shall be continuous Schedule 40 Heavy Duty Polyethylene, orange in color.

3. Trench shall be a minimum of 20" deep and shall be free of rocks and debris.

4. The conduit shall be covered with 6" of white sand if under non-paved surface and 1/2" clean rock fill if under paved surface..

5. Interconnect conduit shall be marked with an orange marking tape provided by the City.

6. The trench shall then be backfilled with material free of large rocks, broken concrete, and other debris.

7. A green jacketed #14 stranded copper trace wire shall be installed in all interconnect conduit.

8. Do not ground trace wire nor extend into controller cabinets.

9. No splices will be allowed in HDPE conduit.

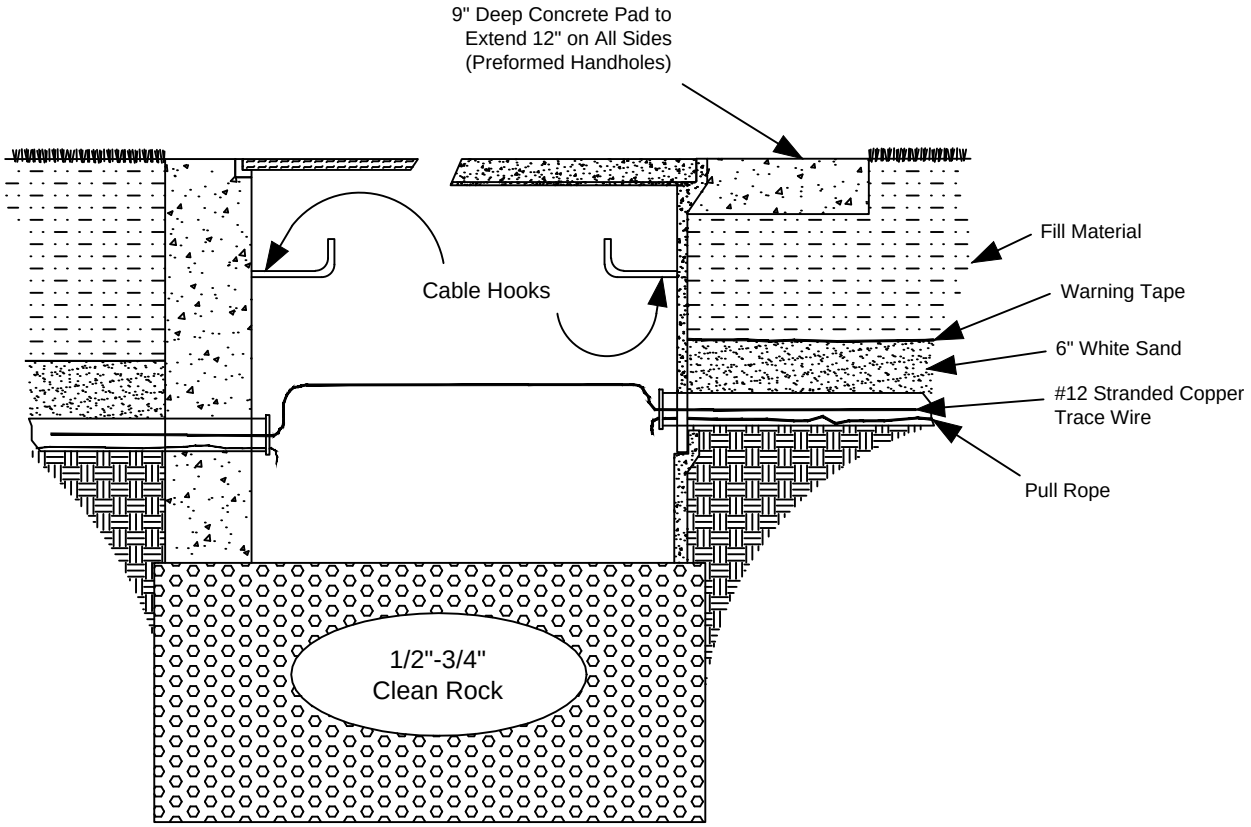

NOT TO SCALE

DEPARTMENT OF PUBLIC WORKS SPRINGFIELD, MO.	**TRENCH AND CONDUIT DETAIL**	ADOPTED: TS-16

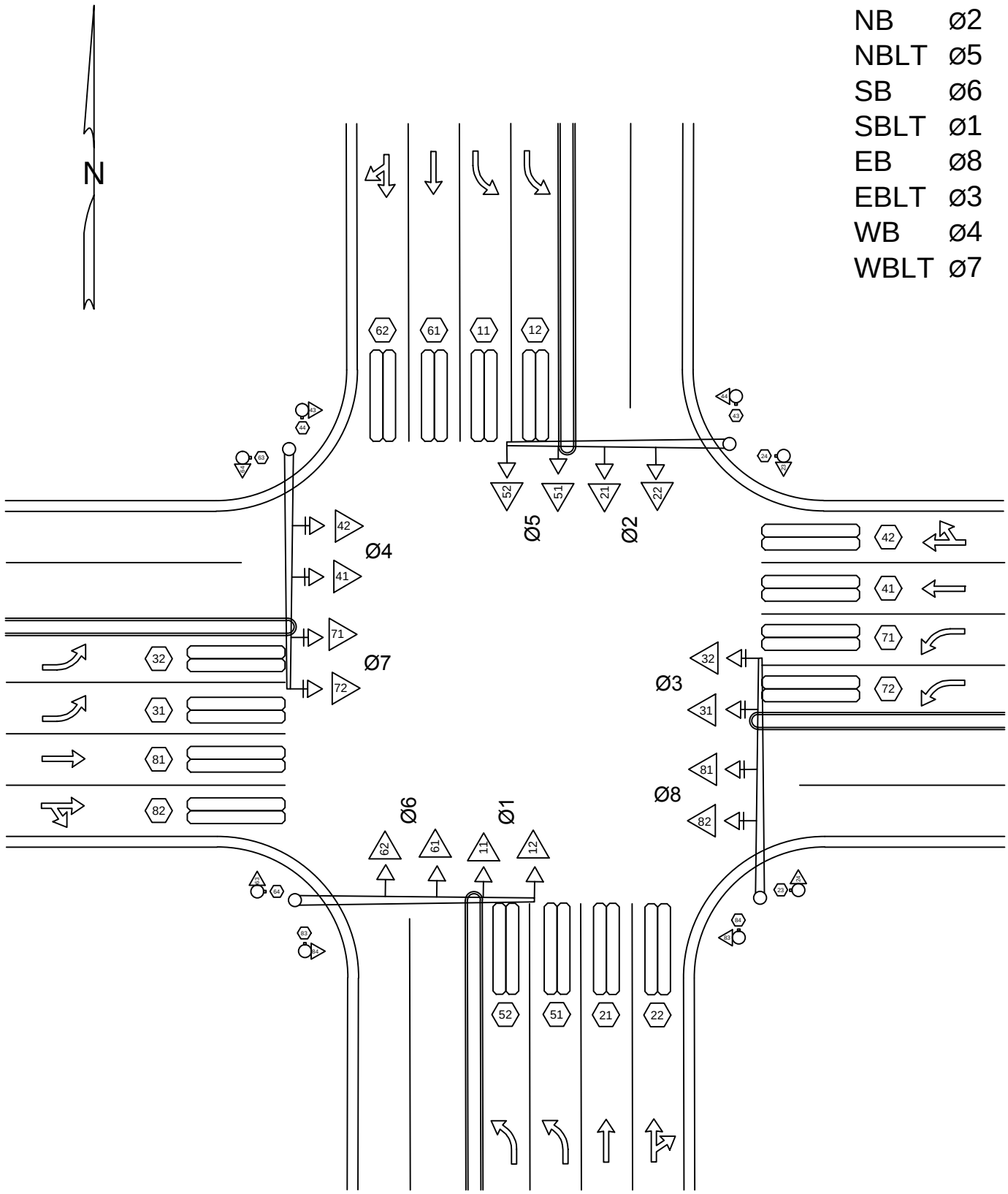

NOT TO SCALE

DEPARTMENT OF PUBLIC WORKS SPRINGFIELD, MO.	**SIGNAL PHASING LAYOUT**	ADOPTED: TS-17

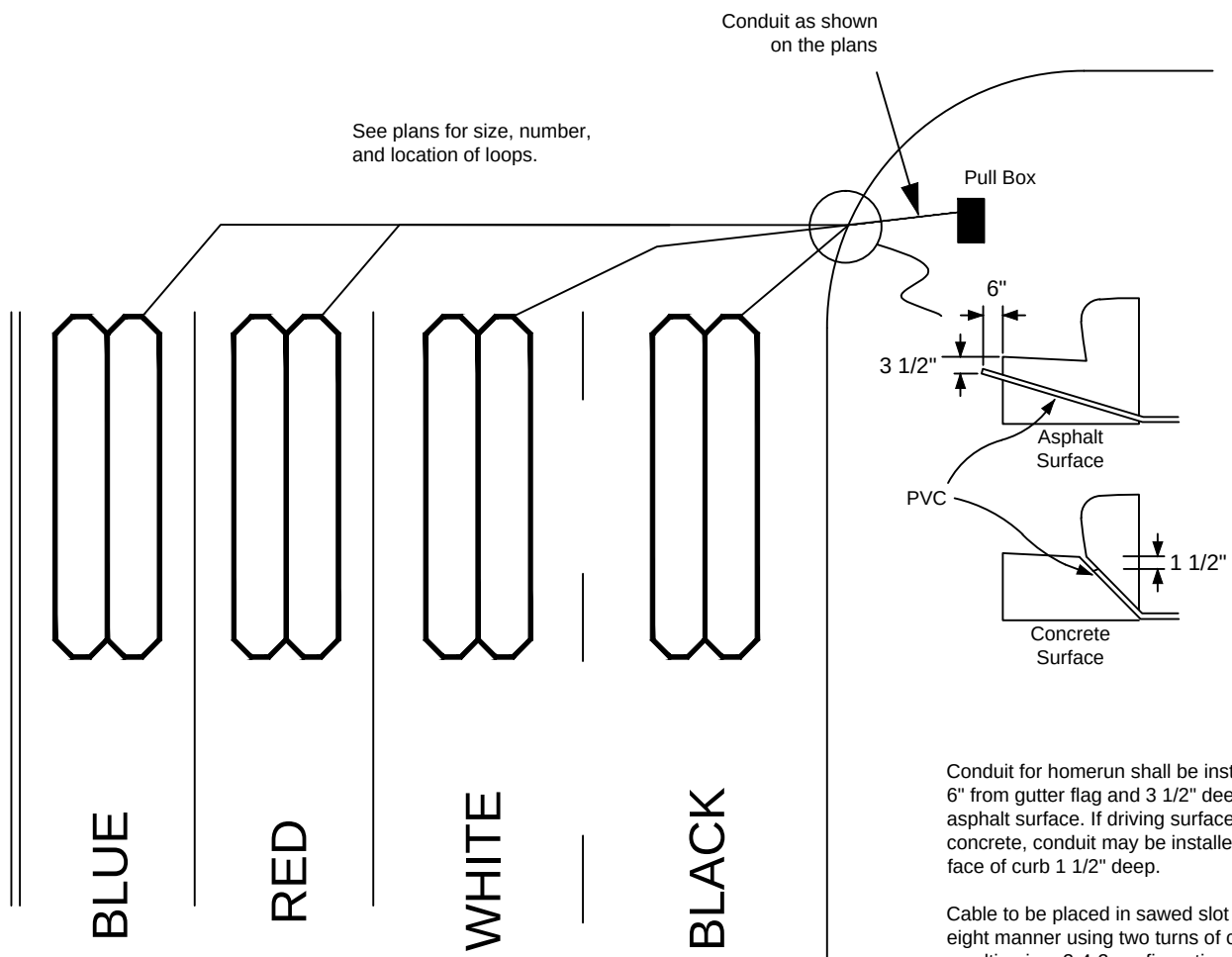

Conduit for homerun shall be installed 6" from gutter flag and 3 1/2" deep in asphalt surface. If driving surface is concrete, conduit may be installed at face of curb 1 1/2" deep.

Cable to be placed in sawed slot in a figure eight manner using two turns of cable, resulting in a 2-4-2 configuration.

Twist homerun cable 3 turns per foot.

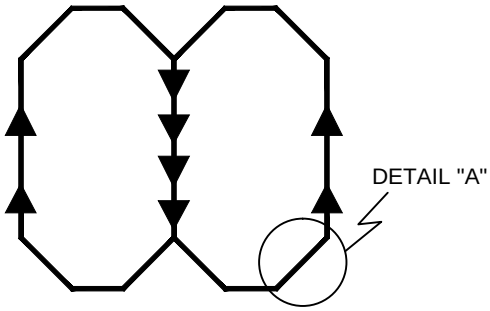

Overlap saw cuts to ensure full depth at corners.
Cut 45 degree corners as shown.

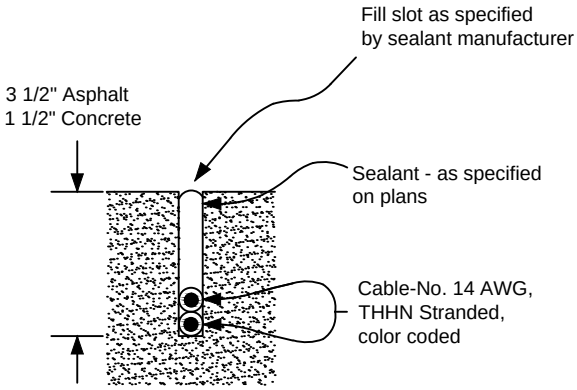

Lanes shall be designated from right to left,
with the curb lane being lane 1.
Black cable shall be used for lane 1, white for lane 2,
red for lane 3, and blue for lane 4.

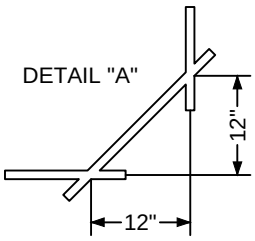

NOT TO SCALE

DEPARTMENT OF PUBLIC WORKS SPRINGFIELD, MO.	**DETECTOR LOOP INSTALLATION**	ADOPTED: TS-18

Example 1
Post at back of Sidewalk

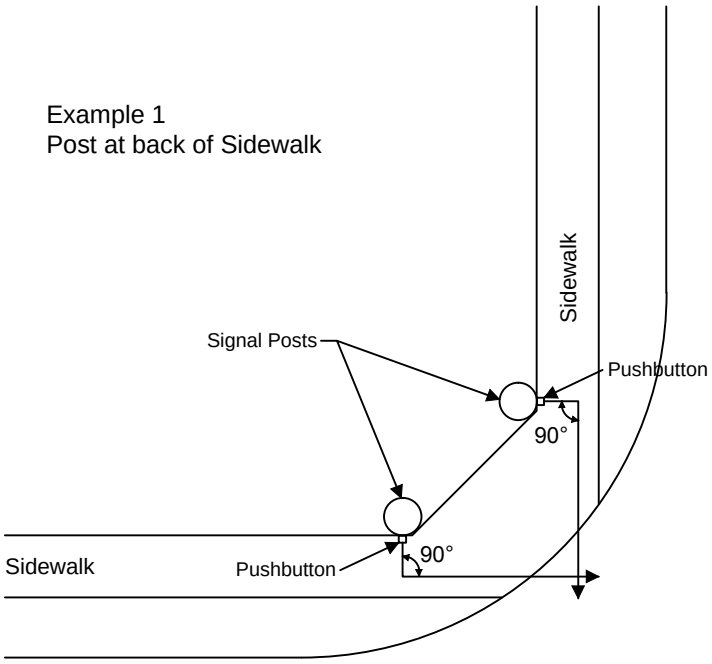

Rule of Thumb: Install the Pushbutton at 90 degree angle to the alignment of crosswalk it serves, 42" above sidewalk grade. Install on the faces adjacent to the sidewalk.

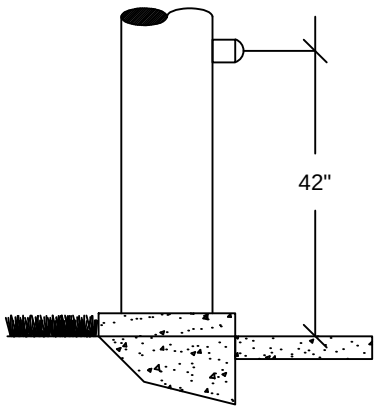

Example 2
Sidewalk back of Post

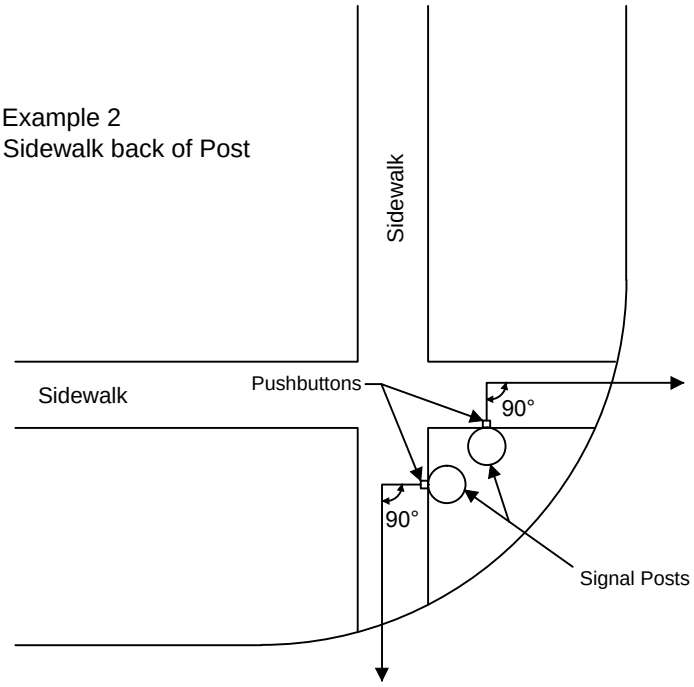

NOT TO SCALE

DEPARTMENT OF PUBLIC WORKS SPRINGFIELD, MO.	**PEDESTRIAN PUSHBUTTONS**	ADOPTED: TS-19

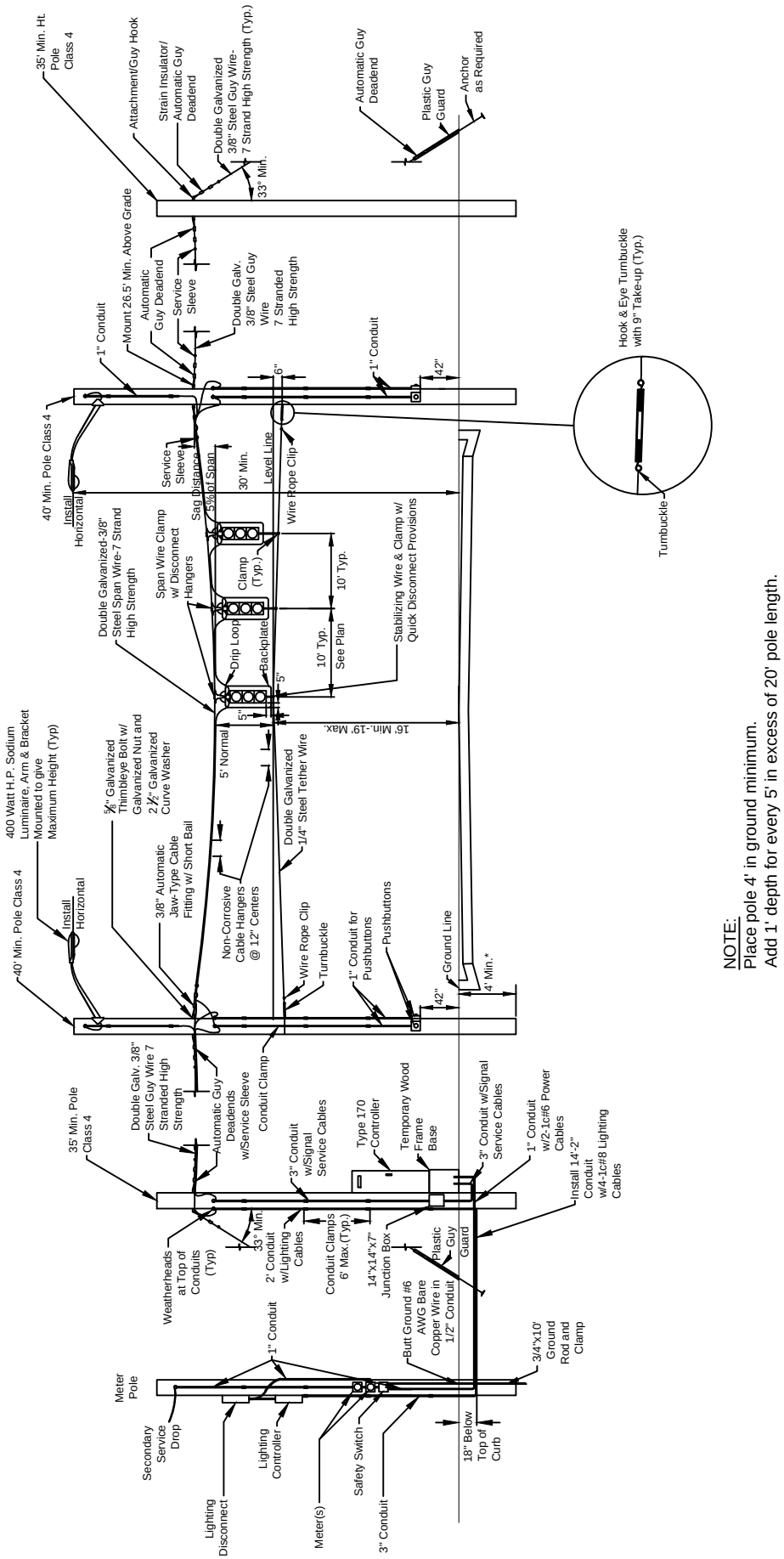

NOTE:
Place pole 4' in ground minimum.
Add 1' depth for every 5' in excess of 20' pole length.

NOT TO SCALE

DEPARTMENT OF PUBLIC WORKS SPRINGFIELD, MO.	**SPAN WIRE DETAILS WOOD POLES**	ADOPTED: TS-20

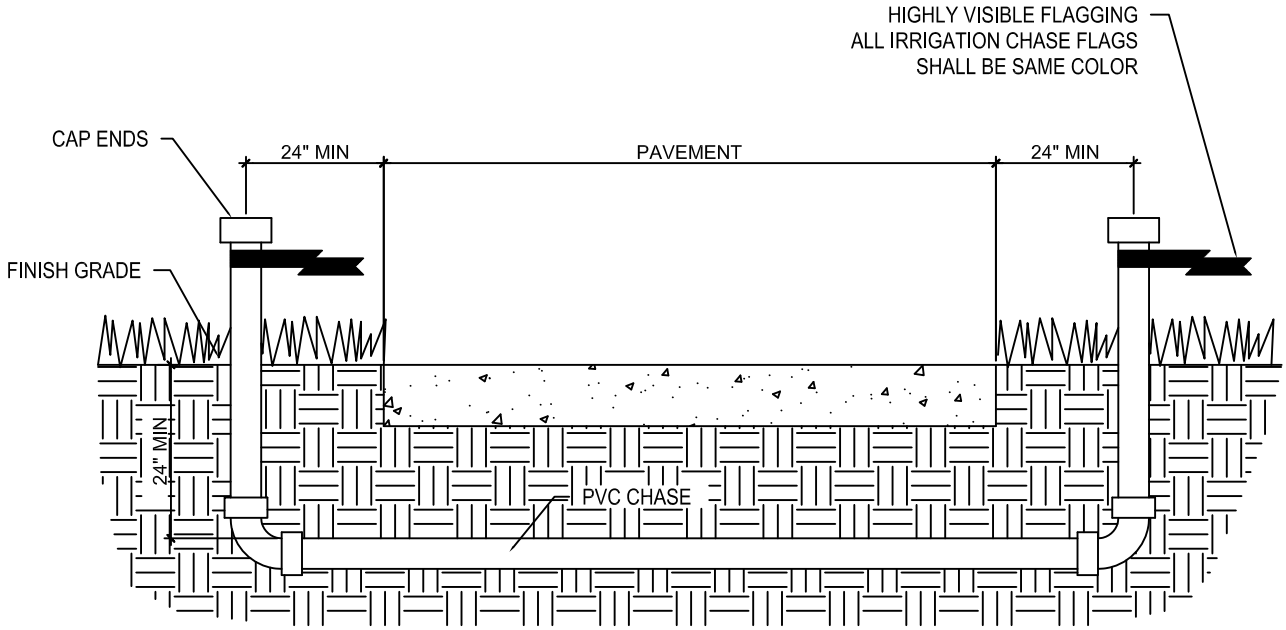

* DETAIL SHOWN IS FOR INSTALLATION OF SLEEVES PRIOR TO CONSTRUCTION OF IRRIGATION SYSTEM OR PAVEMENT.
* REFER TO IRRIGATION LAYOUT SHEETS FOR SLEEVE LOCATIONS AND SIZES.
* PLACE CONTINOUS TRACER WIRE INSIDE ALL SLEEVES
* ALL WIRE SHALL BE IN SEPERATE 2" SLEEVE
* ALL IRRIGATION PIPING SHALL BE IN SLEEVE MINIMUM OF 2" GREATER THAN SUM OUTER DIAMETER OF ALL PIPING

NOT TO SCALE

DEPARTMENT OF PUBLIC WORKS SPRINGFIELD, MO.	**TYPICAL SLEEVING DETAIL**	ADOPTED: 7/1/2013 LI - 1

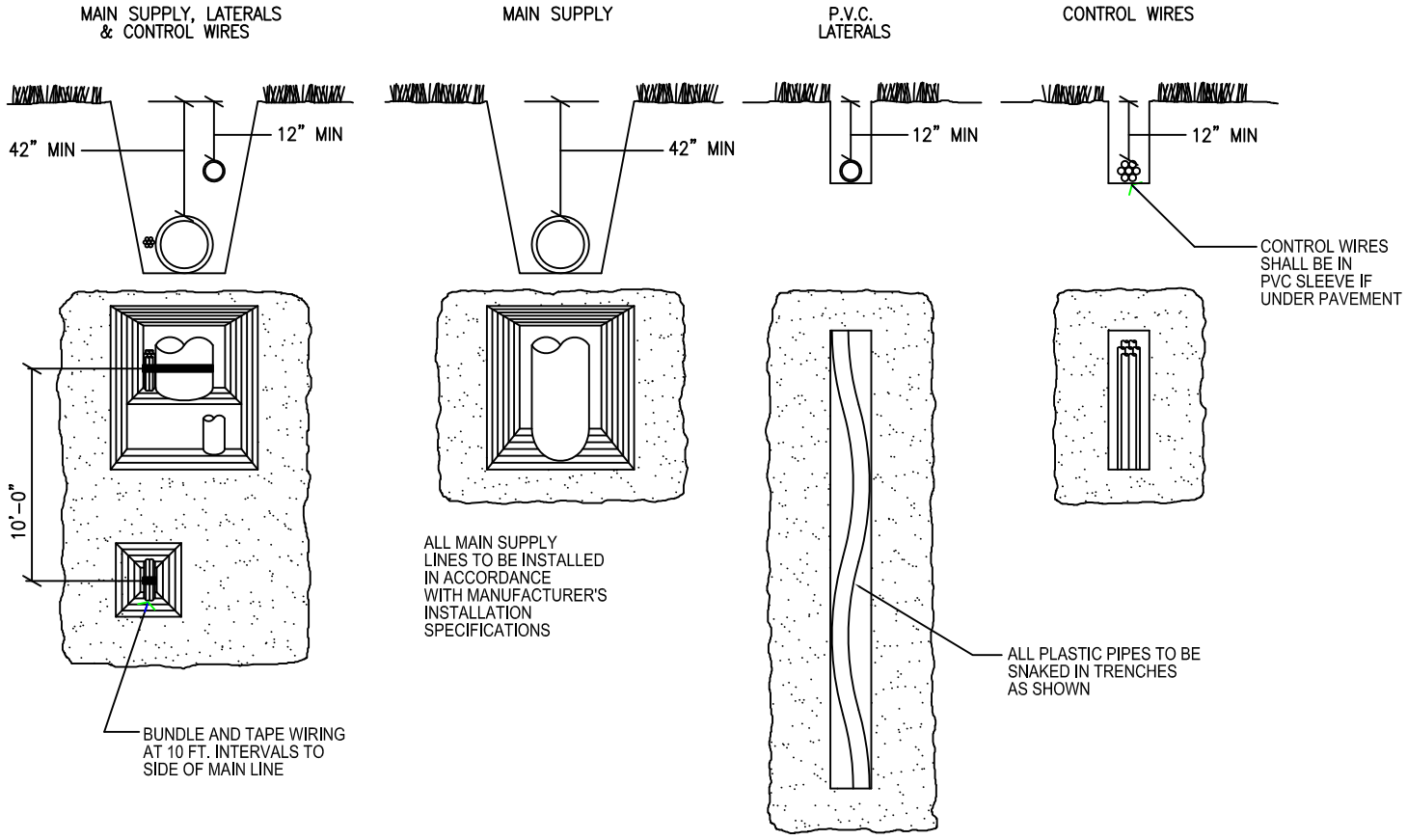

NOT TO SCALE

DEPARTMENT OF PUBLIC WORKS SPRINGFIELD, MO.	**TYPICAL TRENCHING DETAIL**	ADOPTED: 7/1/2013 LI - 2

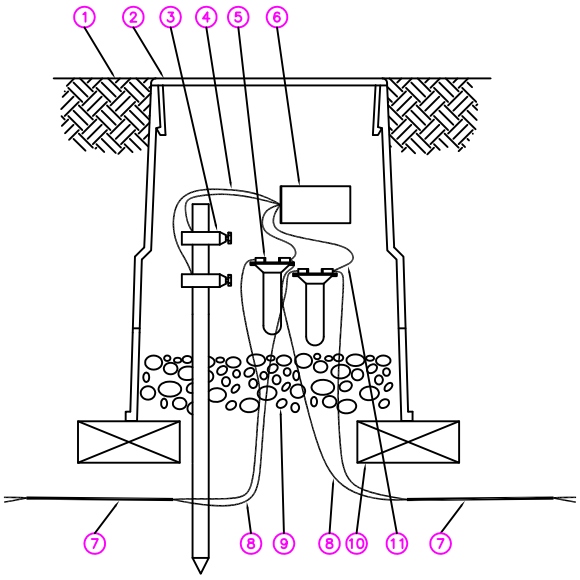

1. FINISH GRADE OR TOP OF MULCH

2. 10-INCH VALVE BOX WITH COVER:

3. RAIN BIRD VB-10RNDGROUNDING ROD: 10 OHMS OR LESS

4. GREEN/YELLOW WIRE FROM LSP-1TURFTURF TO GROUNDING ROD BRASS CLAMPS (1 OF 2)

5. DB SERIES WIRE CONNECTOR: RAIN BIRD DBTWC25 (1 OF 2)

6. LINE SURGE PROTECTOR: RAIN BIRD LSP-1TURF M10008

7. TWO-WIRE CABLE TO NEXT DEVICE (FIELD DECODER, SENSOR DECODER, LINE SURGE PROTECTOR OR ESP-LXD CONTROLLER)

8. COMMUNICATION WIRE TO NEXT DEVICE (FIELD DECODER, SENSOR DECODER, LINE SURGE PROTECTOR OR ESP-LXD CONTROLLER)

9. 3-INCH MINIMUM DEPTH OF 3/4-INCH WASHED GRAVEL

10. BRICK (1 OF 2)

11. BLUE WIRE FROM LSP-1TURF TO DB SERIES WIRE CONNECTOR

NOTES:

A. LSP-1TURF SHOULD BE INSTALLED EVERY 500-FEET OR FOR EVERY EIGHT DECODERS ON TWO-WIRE PATH.

B. LSP-1TURF TO BE INSTALLED AT END OF WIRE RUN THAT TERMINATES IN THE FIELD (STAR CONFIGURATION).

C. RAIN BIRD FD-401TURF AND FD-601TURF FIELD DECODERS COME WITH LSP-1TURF'S BUILT-IN. FD-101TURF, FD-102TURF AND FD-202TURF REQUIRE SEPARATE LSP-1TURF PROTECTION.

NOT TO SCALE

DEPARTMENT OF PUBLIC WORKS SPRINGFIELD, MO.	**SURGE PROTECTOR CONNECTION TO 2-WIRE**	ADOPTED: 7/1/2013 LI - 3

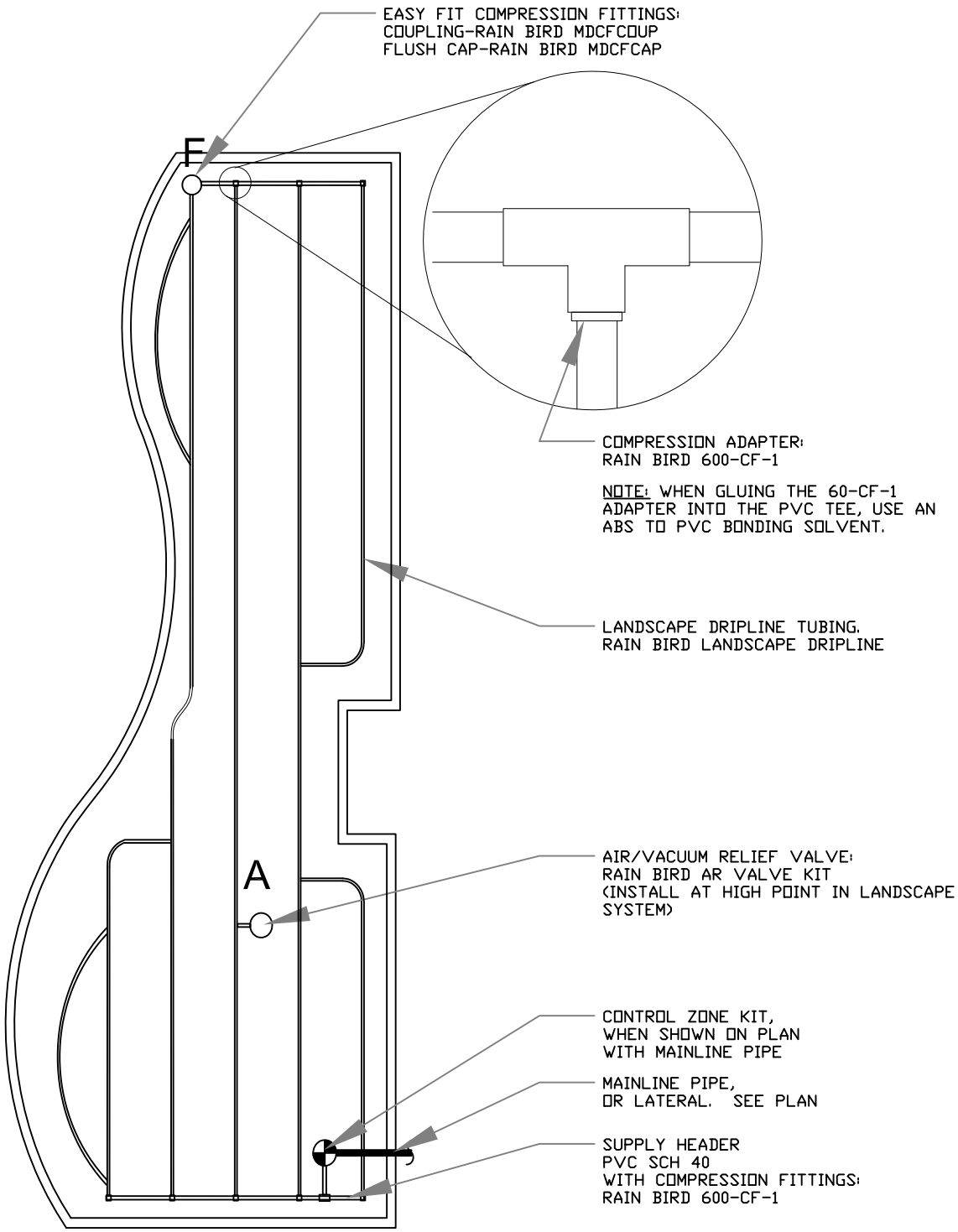

NOT TO SCALE

DEPARTMENT OF PUBLIC WORKS SPRINGFIELD, MO.	**DRIPLINE LAYOUT AT SHUB BEDS**	ADOPTED: 7/1/2013 LI - 4

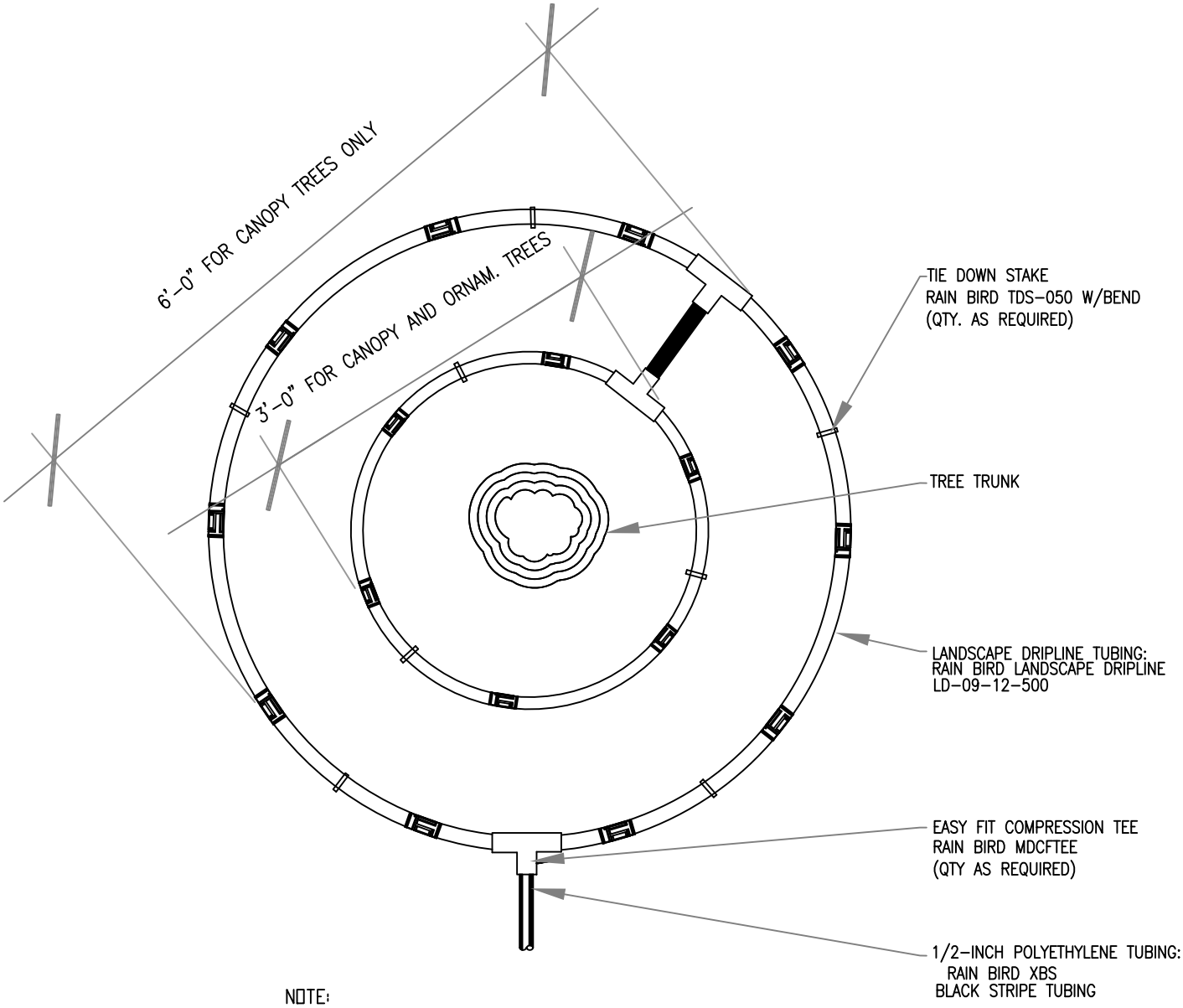

NOTE:
1. SEE "LOW-VOLUME LANDSCAPE IRRIGATION DESIGN MANUAL (D39030D) FOR DRIPLINE EMITTER SPACING.
2. QUANTITY OF DRIPLINE RINGS, EMITTER SPACING AND FLOWS ARE DEPENDANT ON TREE CANOPY SIZE.

NOT TO SCALE

DEPARTMENT OF PUBLIC WORKS SPRINGFIELD, MO.	**DRIP LINE ST SOLO TREE LOCATION**	ADOPTED: 7/1/2013 LI - 5

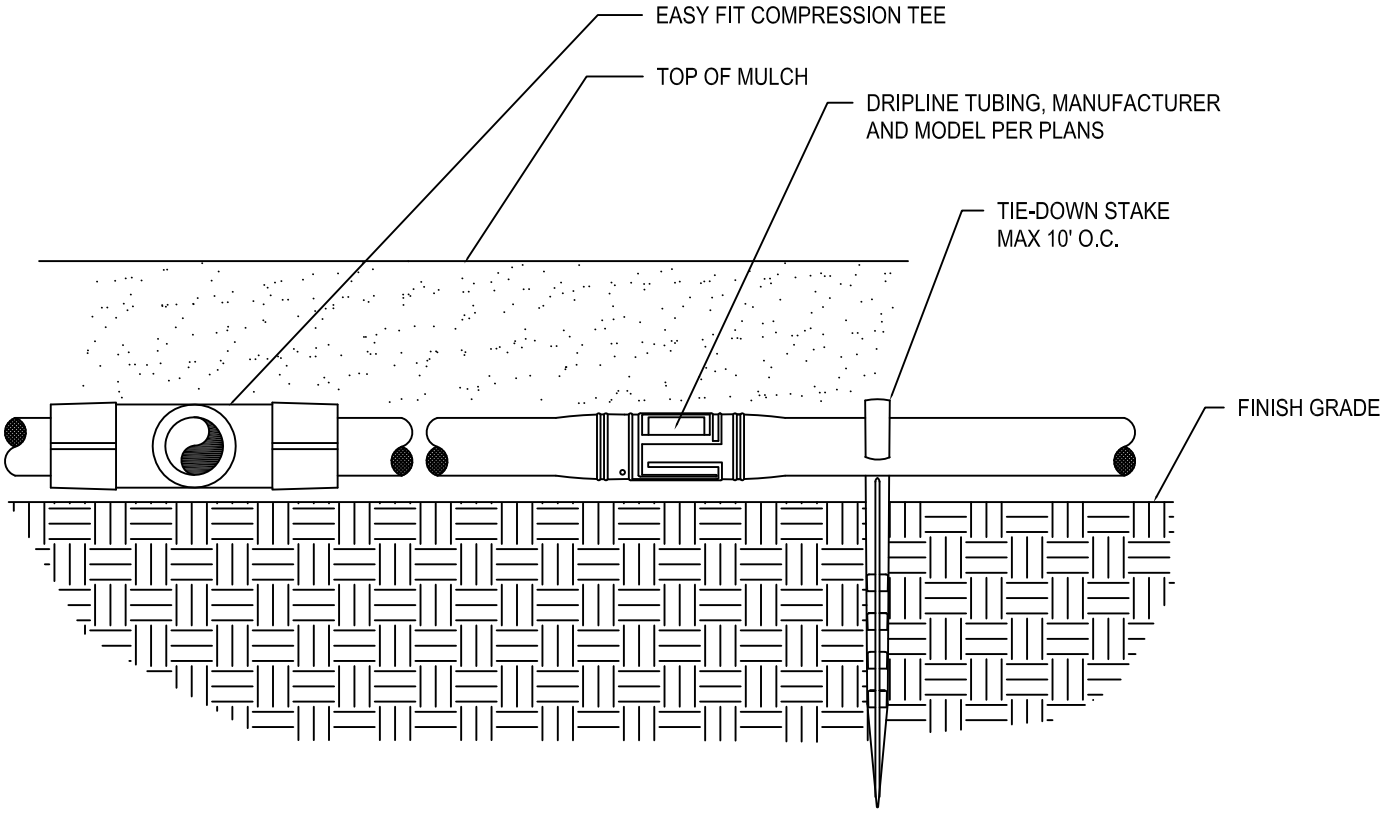

NOT TO SCALE

DEPARTMENT OF PUBLIC WORKS SPRINGFIELD, MO.	**DRIPLINE TUBING**	ADOPTED: 7/1/2013 LI - 6

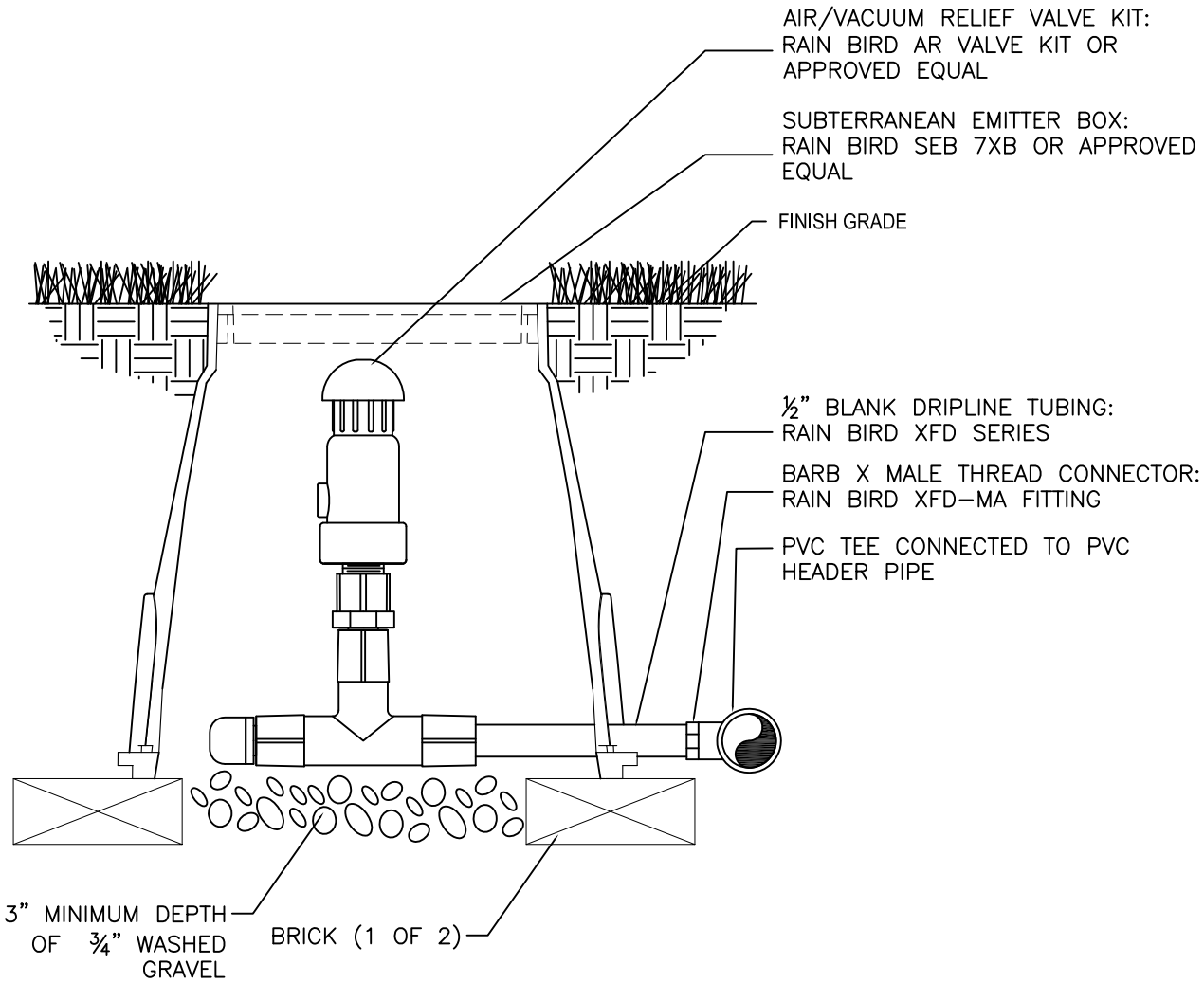

NOT TO SCALE

DEPARTMENT OF PUBLIC WORKS SPRINGFIELD, MO.	**AIR/VACUM RELIEF VALVE**	ADOPTED: 7/1/2013 LI - 7

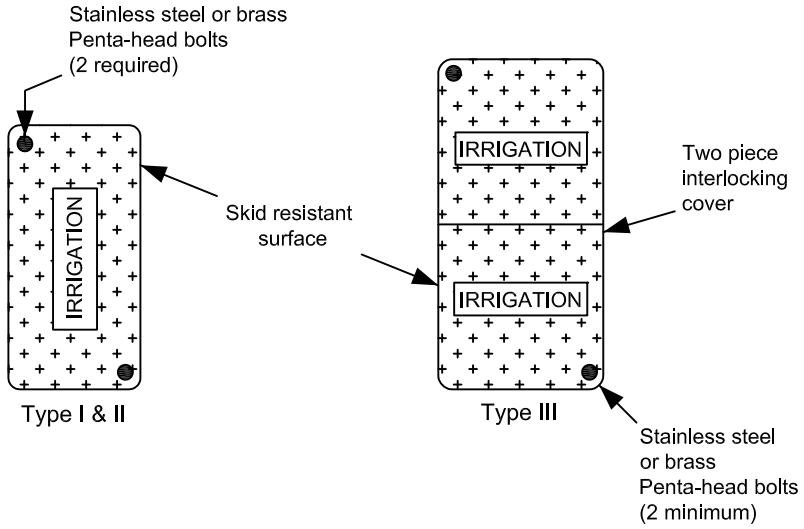

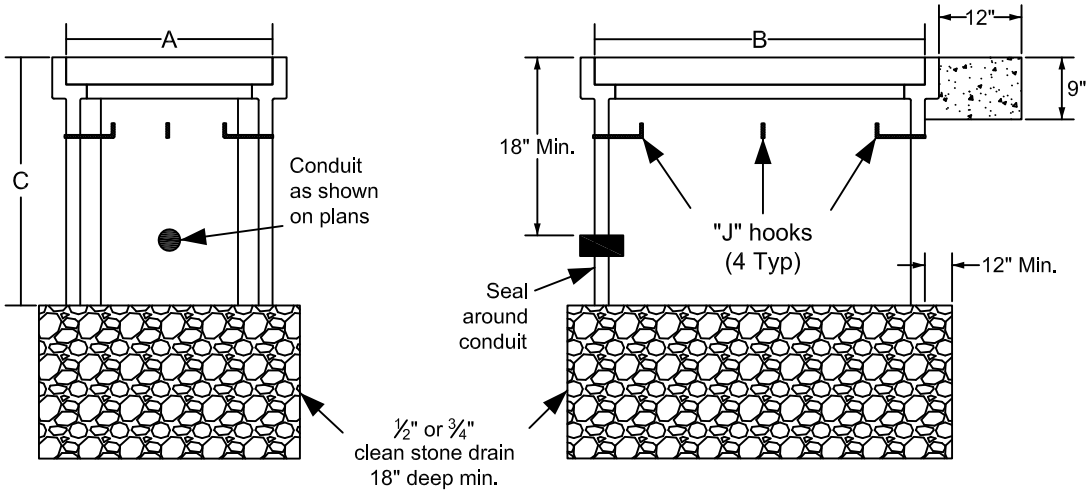

	DIMENSIONS		
	TYPE I	TYPE II	TYPE III
A	17"	24"	30"
B	30"	36"	48"
C	28"	30"	36"

Notes:
1. Preformed pull boxes shall be used unless otherwise specified on the plans.

2. Lift opening is required on all covers.

3. All demensions are nominal.

4. If extensions are needed, they shall be compatable and from the same manufacturer.

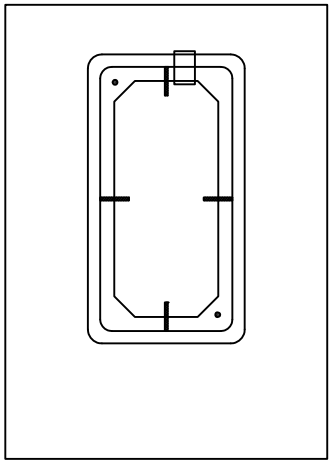

9" Thick concrete
pad 12" all sides

NOT TO SCALE

DEPARTMENT OF PUBLIC WORKS SPRINGFIELD, MO.	**PREFORMED IRRIGATION PULL BOXES**	ADOPTED: 7/1/2013 LI-8

NOTES:

DO NOT HEAVILY PRUNE THE TREE AT PLANTING. PRUNE ONLY CROSSOVER LIMBS, CO–DOMINANT LEADERS, AND BROKEN OR DEAD BRANCHES. SOME INTERIOR TWIGS AND LATERAL BRANCHES MAY BE PRUNED; HOWEVER, DO NOT REMOVE THE TERMINAL BUDS OF BRANCHES THAT EXTEND TO THE EDGE OF THE CROWN.

STAKE TREES ONLY IF DIFFICULT KEEPING PLUMB OR AS CITY INSPECTION.

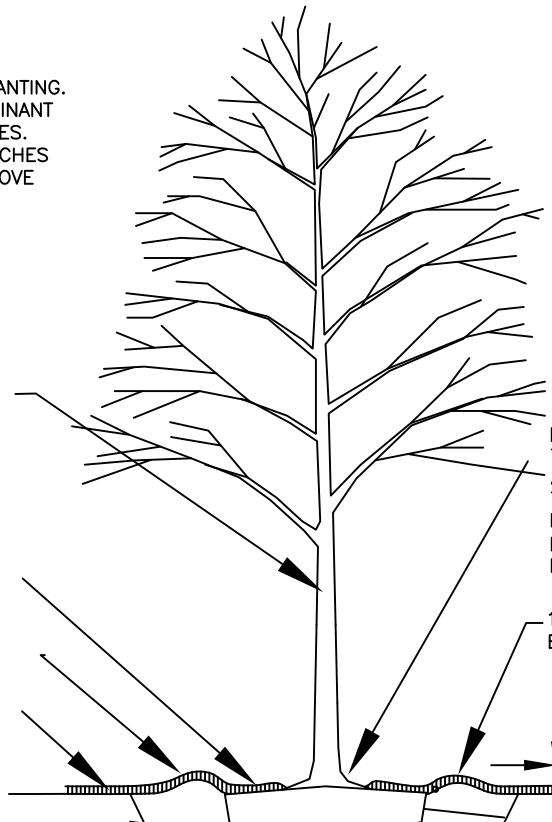

MARK THE NORTH SIDE OF THE TREE IN THE NURSERY, AND ROTATE TREE TO FACE NORTH AT THE SITE WHEN EVER POSSIBLE.

EACH TREE MUST BE PLANTED SUCH THAT THE TRUNK FLARE IS VISIBLE AT THE TOP OF THE ROOT BALL. TREES WHERE THE TRUNK FLARE IS NOT VISIBLE SHALL BE REJECTED. DON'T COVER THE TOP OF THE ROOT BALL WITH SOIL.

SET TOP OF ROOT BALL FLUSH TO GRADE OR 25MM–50MM (1"–2") HIGHER IN SLOWLY DRAINING SOILS.

MULCH RING, 1800MM (6') DIA.

100MM (4") HIGH EARTH SAUCER BEYOND EDGE OF ROOT BALL.

DRIP IRRIGATION RING. SEE DETAIL

SHOVEL–CUT EDGE AT EDGE OF MULCH RING. SEE DETAIL

75MM (3") MULCH. DO NOT PLACE MULCH IN CONTACT WITH TREE TRUNK.

1.0'

TREE PIT MIN. WIDTH IS 2 X WIDTH OF ROOT BALL.

REMOVE ALL TWINE, ROPE, WIRE AND BURLAP FROM ROOT BALL.

IF PLANT IS SHIPPED WITH A WIRE BASKET AROUND ROOT BALL, CUT THE WIRE BASKET & REMOVE IT.

TAMP SOIL AROUND ROOT BALL BASE FIRMLY WITH FOOT PRESSURE SO THAT ROOT BALL DOESN'T SHIFT.

PLACE ROOT BALL ON UNEXCAVATED OR TAMPED SOIL.

NOT TO SCALE

DEPARTMENT OF PUBLIC WORKS SPRINGFIELD, MO.	**TREE DETAIL**	ADOPTED: 7/1/2013 LP - 1

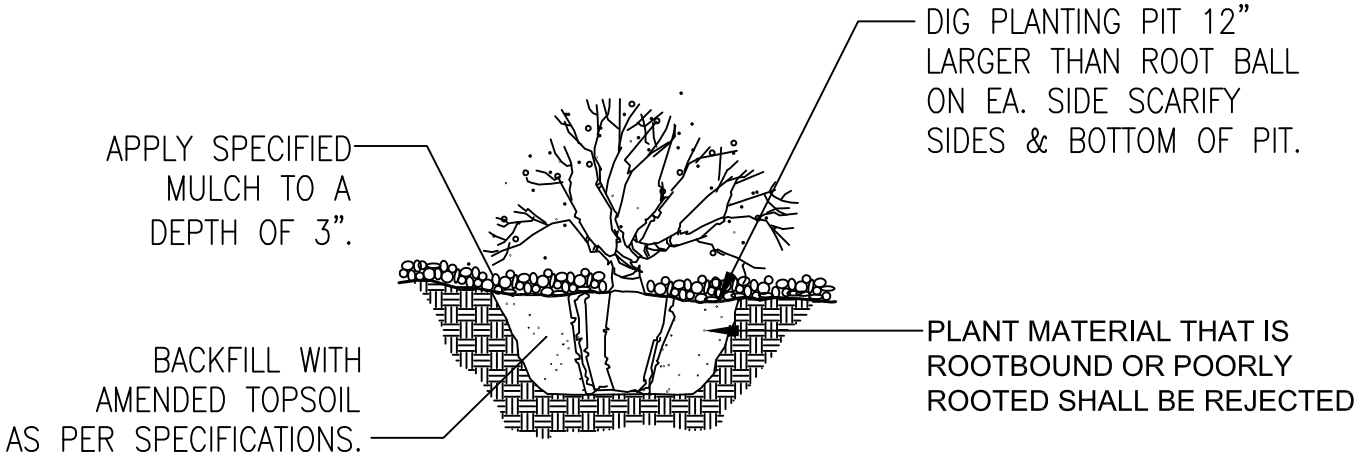

NOTE:

1. SET SHRUBS AT SAME GRADE AS GROWN IN NURSERY.
2. PRUNE ALL DAMAGED OR DEAD WOOD PRIOR TO PLANTING.

NOT TO SCALE

DEPARTMENT OF PUBLIC WORKS SPRINGFIELD, MO.	**SHRUB IN TOPSOIL**	ADOPTED: 7/1/2013 LP - 2

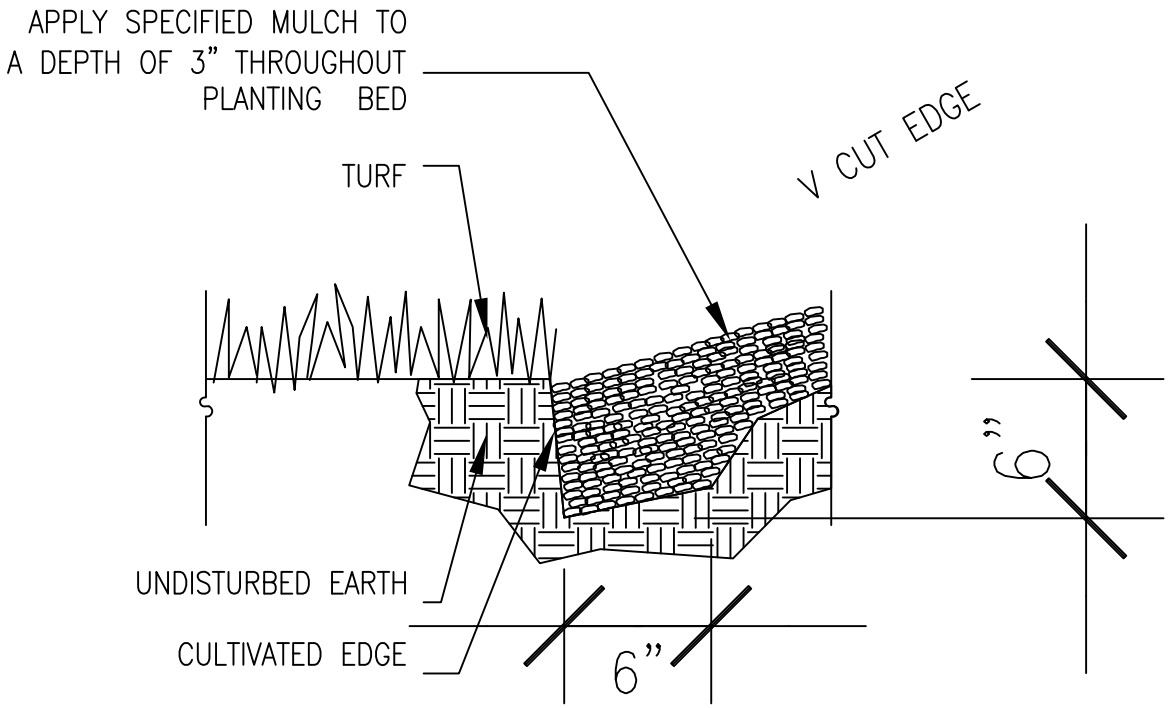

NOT TO SCALE

DEPARTMENT OF PUBLIC WORKS SPRINGFIELD, MO.	**SHOVEL-CUT EDGE**	ADOPTED: 7/1/2013 LP - 3