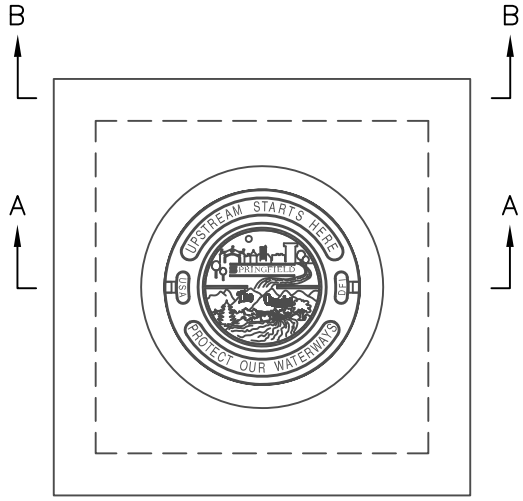

PLAN VIEW

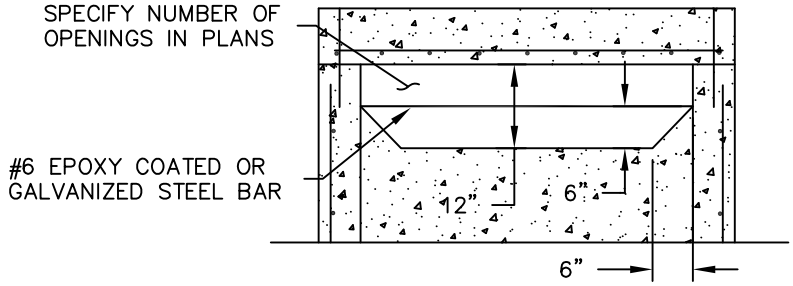

SECTION B–B

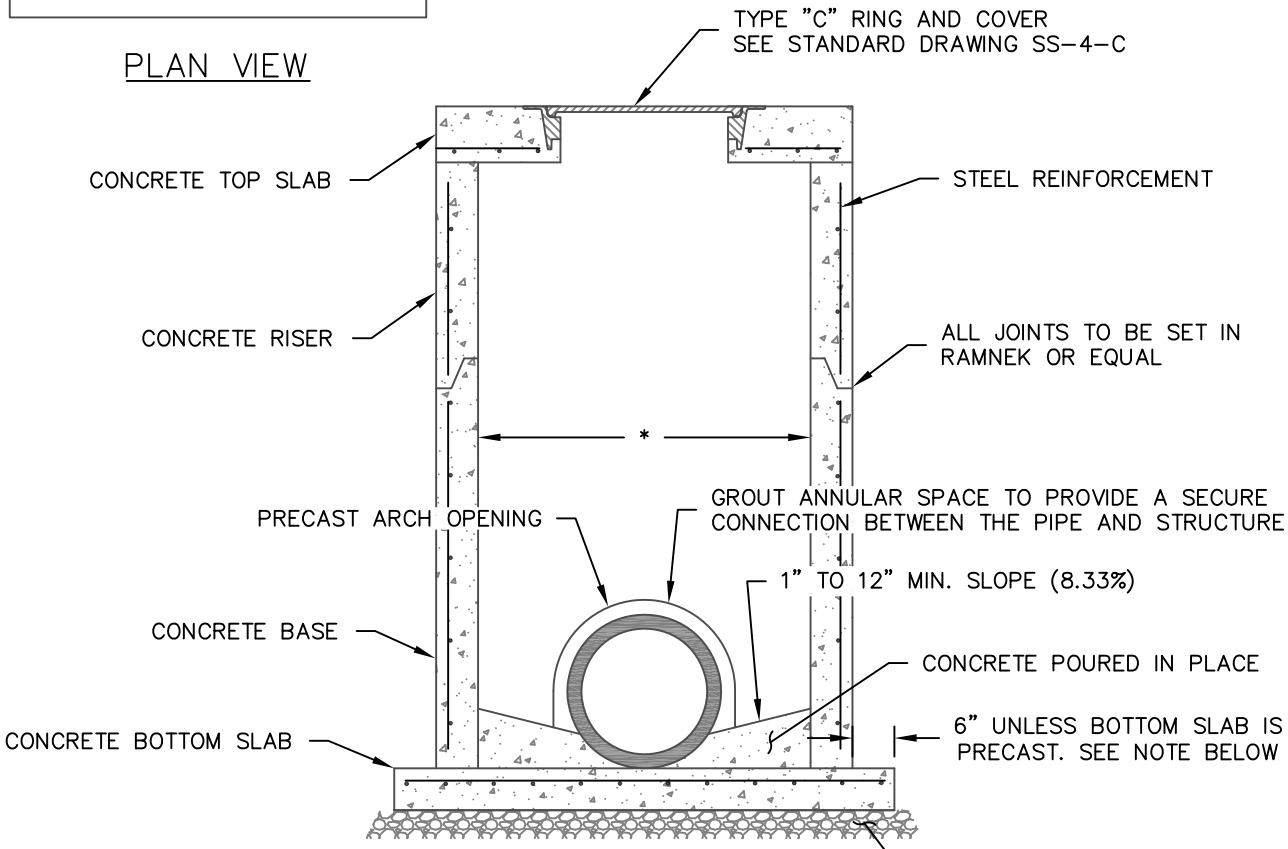

SECTION A–A

NOTES:

1. AREA INLET SHALL BE DESIGNED AND MANUFACTURED IN ACCORDANCE WITH ASTM C 913.
2. CONCRETE TOP SLAB SHALL BE DESIGNED TO WITHSTAND LOADING BASED ON A COMBINATION OF DEAD LOADS, SNOW LOADS, AND A–16 (HS20–44) TRAFFIC LOADS IN ACCORDANCE WITH ASTM C890.
3. BOTTOM SLAB SHALL BE POURED IN PLACE. IF MANUFACTURER IS CONCERNED ABOUT STRUCTURAL INTEGRITY OF CONCRETE BASE DURING TRANSPORTATION THEN THE BOTTOM SLAB MAY BE PRECAST WITH CONCRETE BASE.
4. PIPE TO BE ON GRADE BEFORE BOTTOM SLAB IS CONSTRUCTED UNLESS BOTTOM IS PRECAST WITH BASE.
5. ALL PIPES SHALL FIT FLUSH WITH INSIDE FACE OF INLET.
6. BOTTOM OF INLET TO BE FILLED WITH CONCRETE FORMING CHANNELS TOWARD OUTLET PIPE FROM ALL INLET PIPES. CONCRETE SHALL BE FLUSH WITH INVERT OF OUTLET PIPE.
7. CONCRETE TOP SLAB SHALL BE PINNED TO STRUCTURE AT THE CORNERS USING ONE #4 DEFORMED BAR IN EACH CORNER. BAR SHALL EXTEND A MINIMUM OF 6 INCHES INTO RISER BELOW.

PIPE DIAMETER	*MINIMUM INSIDE DIMENSION OF STRUCTURE
15" – 24"	THREE FEET (3')
27" – 30"	FOUR FEET (4')
36" – 42"	FIVE FEET (5')
48" – 54"	SIX FEET (6')

DEPARTMENT OF PUBLIC WORKS SPRINGFIELD, MO.	AREA INLET	ADOPTED: 1–1–15
		SS–5