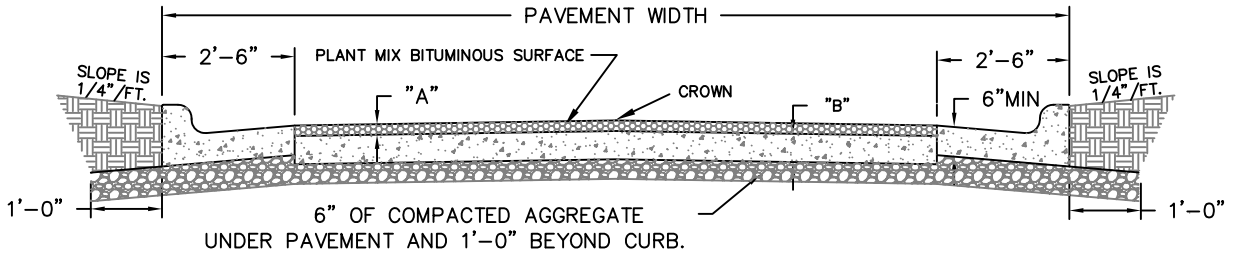

BITUMINOUS PAVEMENT WITH CONCRETE CURB & GUTTER

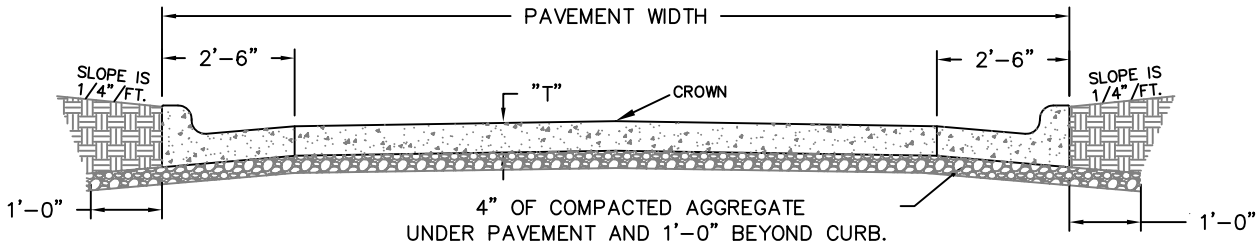

PORTLAND CEMENT CONCRETE PAVEMENT AND CONCRETE CURB & GUTTER

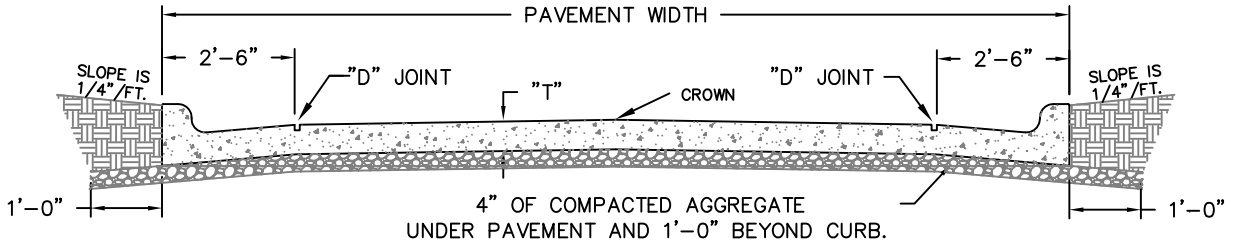

PORTLAND CEMENT CONCRETE PAVEMENT WITH INTEGRAL CURB

STANDARD PAVEMENT WIDTH AND THICKNESS			
STREET TYPE	"T"	"A"	"B"
ALLEY/LOCAL	6"	2"	5"
COLLECTOR	6"	2"	6"
SECONDARY ARTERIAL	7"	2"	8"
PRIMARY ARTERIAL	8"	2"	9"

NOTES: CROSS SLOPE SHALL BE 1/4"/FT. ON ALL PAVEMENTS EXCEPT ALLEYS, SEE STANDARD DRAWING ST-4.

WIDTH OF PAVEMENT IS SUBJECT TO REQUIREMENTS OF THE PLANNING DEPARTMENT AND MAY VARY FROM THE STANDARDS.

TO CREATE A GUTTER SECTION THE CONTRACTOR SHALL FORM A 2" RISE 2' FROM THE INSIDE OF THE CURB. PAVEMENT WIDTH WILL BE MEASURED FROM BACK OF CURBS ON IMPROVED STREETS. PAVEMENT CROWN SHOULD BE CENTERED IN RIGHT OF WAY.

DEPARTMENT OF PUBLIC WORKS SPRINGFIELD, MO.	TYPICAL STREET SECTIONS	REVISED: 7/1/2013
		ST-1

NOTE: KEYWAY OR #5 REBAR @ 2' 6" O.C. TO BE USEDON ALL CONCRETE PAVEMENT.
ASPHALT PAVEMENT – DOWELL AND KEYWAY SHALL BE OMITTED

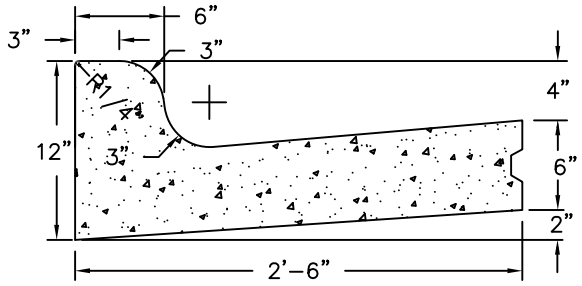

ALLEYS, LOCAL, AND COLLECTOR STREETS

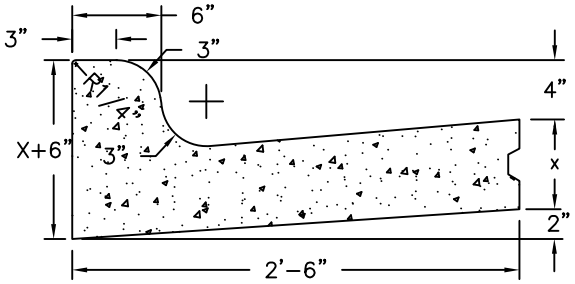

COLLECTOR, 2ND ARTERIAL & HIGHER
X TO MATCH PAVEMENT THICKNESS;
8" MAX FOR ASPHALT PAVEMENT

STANDARD RESIDENTIAL DRIVEWAY OPENING

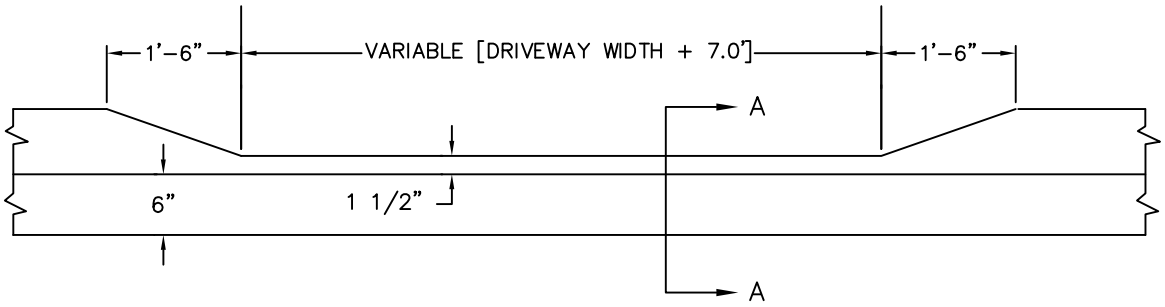

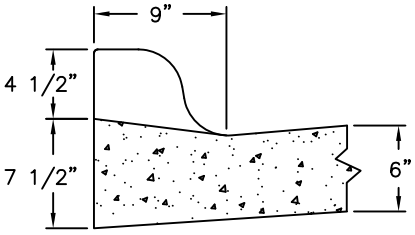

SECTION A–A

DEPARTMENT OF PUBLIC WORKS SPRINGFIELD, MO.	CURB & GUTTER / DRIVEWAY OPENING	REVISED 7–1–2015 ST–2

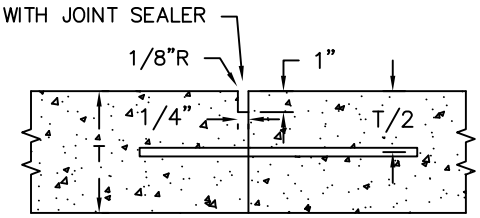

DOWELED LONGITUDINAL JOINT
WITH 24" No.6 DEFORMED BAR AT 24" O.C.

TYPE "A"

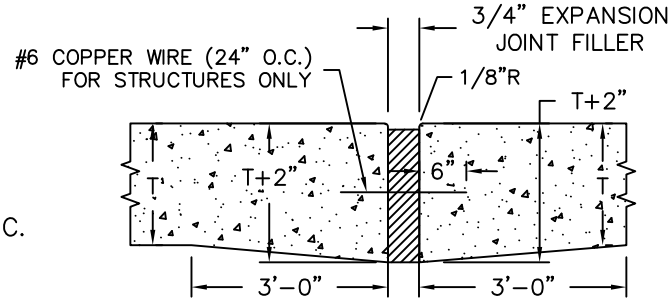

EXPANSION JOINT

TYPE "E"

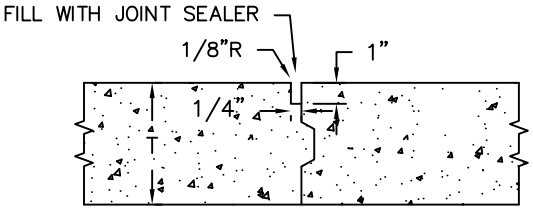

KEYED LONGITUDINAL JOINT

TYPE "B"

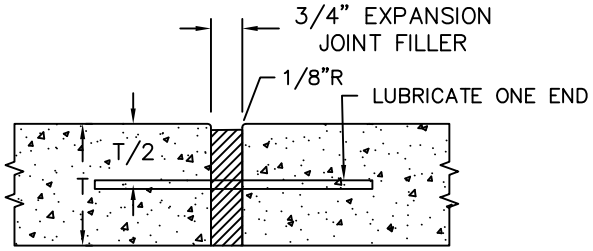

DOWELED EXPANSION JOINT
3/4" x 15" DOWEL BAR AT 24" O.C.

TYPE "F"

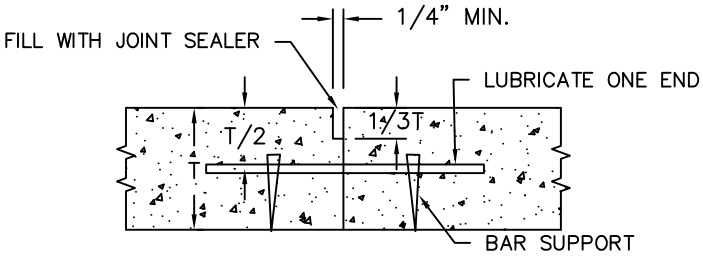

SAWED CONTRACTION JOINT WITH
1" x 18" DOWEL BAR AT 24" O.C.

TYPE "C"

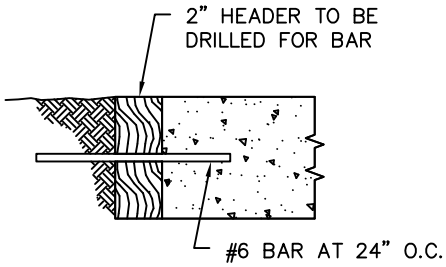

CONSTRUCTION HEADER CONCRETE

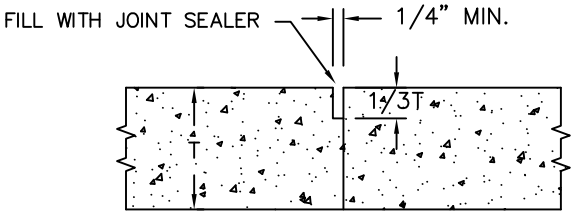

SAWED CONTRACTION JOINT

TYPE "D"

DEPTH OF SAW JOINT:
$\frac{1}{3}$ OF PAVEMENT THICKNESS

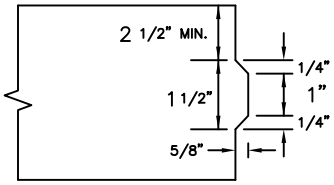

DETAIL KEY
KEYWAY FORMED BY FASTENING KEY TO FORM

DEPARTMENT OF PUBLIC WORKS SPRINGFIELD, MO.	JOINT DETAILS – CONCRETE PAVEMENT	REVISED: 7/1/2013 ST–3

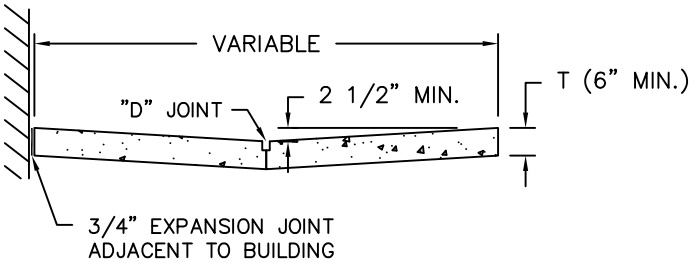

TYPICAL ALLEY SECTION

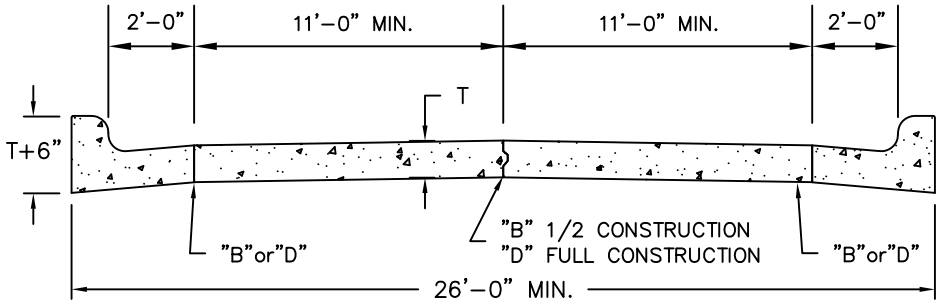

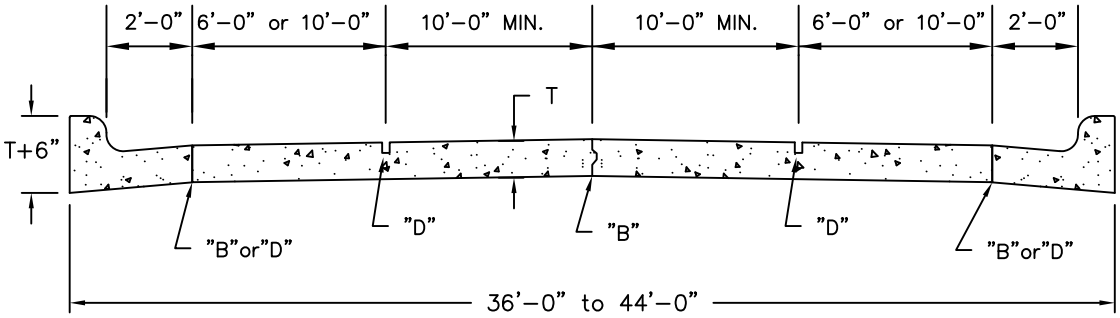

CONCRETE PAVEMENT – JOINT LOCATIONS

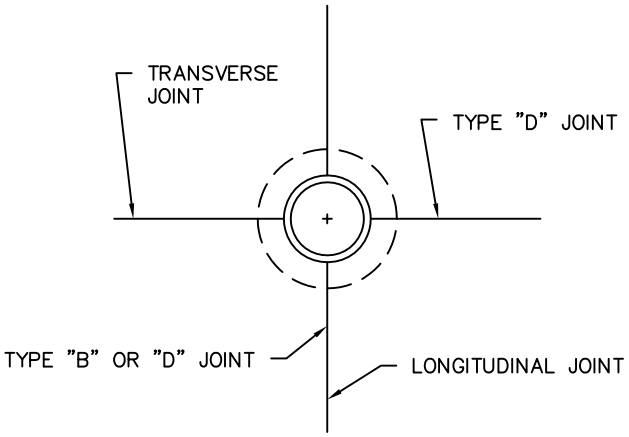

MANHOLE JOINT DETAIL

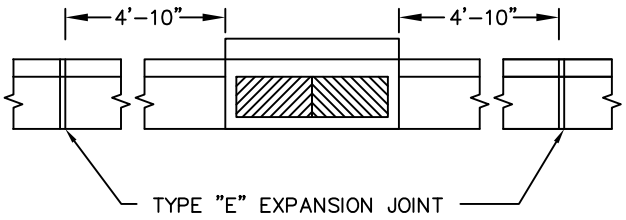

JOINT LOCATION AT INLETS

DEPARTMENT OF PUBLIC WORKS SPRINGFIELD, MO.	JOINT LOCATION – CONCRETE PAVEMENT	ADOPTED: ST–4

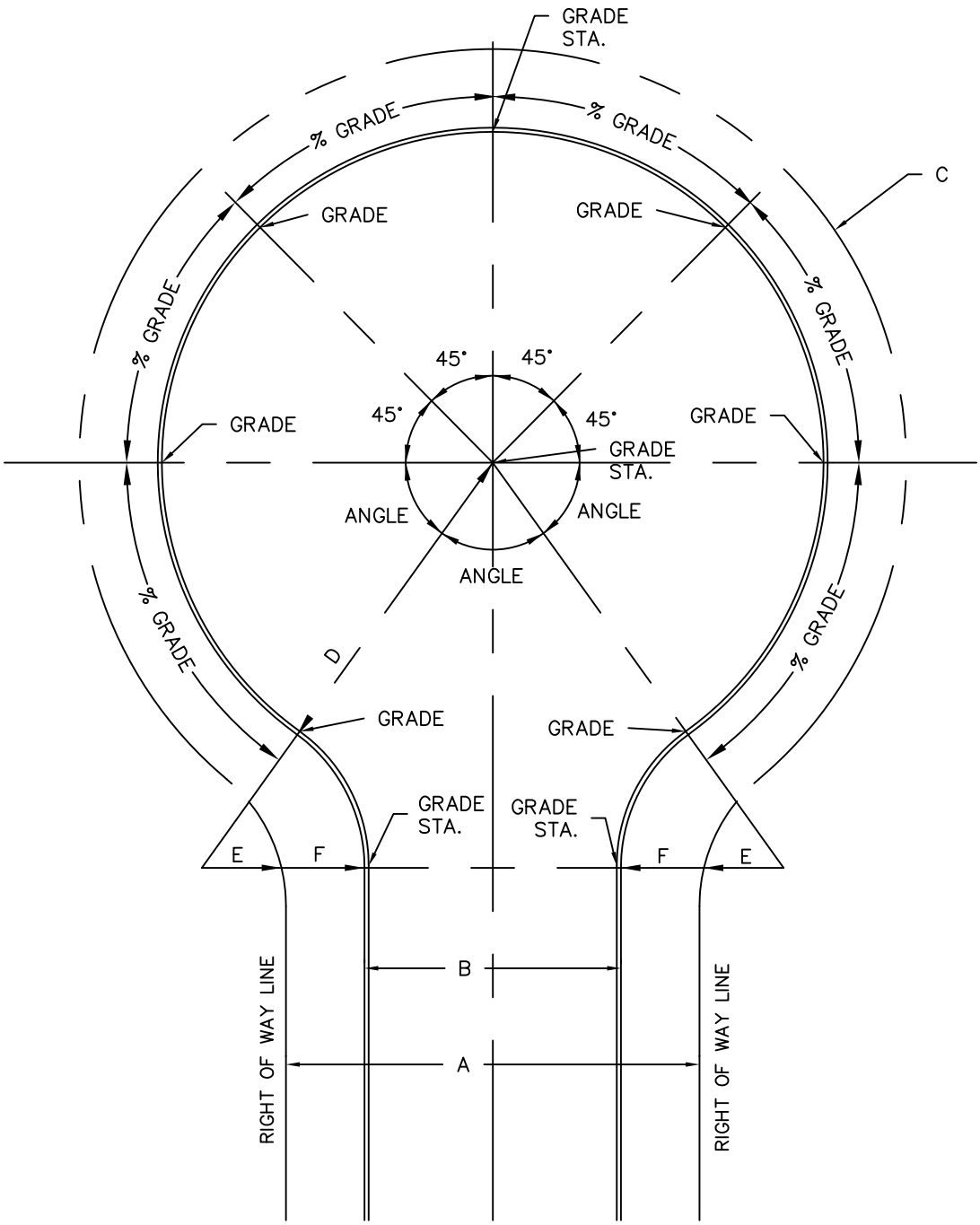

MINIMUM DIMENSIONS (FEET)			
DESCRIPTION	**KEY**	**STANDARD**	**INDUSTRIAL**
STREET RIGHT-OF-WAY WIDTH	A	50	60
STREET PAVEMENT WIDTH TO BACK OF CURB	B	27	37
CUL-DE-SAC RIGHT-OF-WAY RADIUS	C	60	75
CUL-DE-SAC PAVEMENT RADIUS TO BACK OF CURB	D	48.5	63.5
INTERNAL CURVE, RIGHT-OF-WAY RADIUS	E	20	20
INTERNAL CURVE, BACK OF CURB RADIUS	F	31.5	31.5

NOTE: MAXIMUM LENGTH OF CUL–DE–SAC
SHALL BE 800 FEET.

DEPARTMENT OF PUBLIC WORKS SPRINGFIELD, MO.	STANDARD CUL–DE–SAC	ADOPTED: DRAFT ST–5

MINIMUM REQUIREMENTS FOR LAYOUT ELEMENTS

X DENOTES THAT STALL NOT ACCESSIBLE IN CERTAIN LAYOUTS

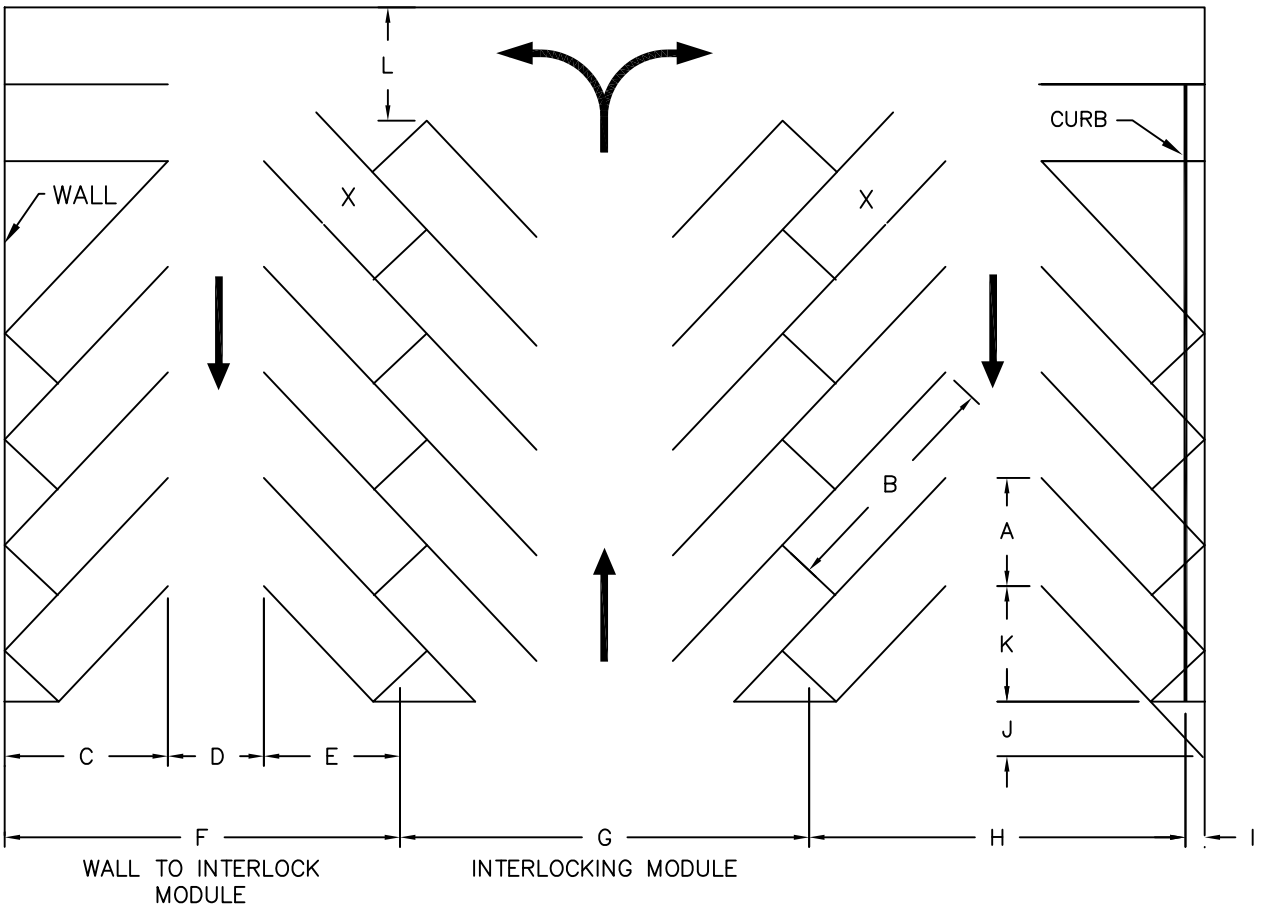

PARKING LAYOUT DIMENSIONS (IN FEET) FOR 9 FT. STALLS AT VARIOUS ANGLES

DIMENSION	SYMBOL	90°	75°	60°	45°	30°
STALL WIDTH, PARALLEL TO AISLE	A	9.0	9.3	10.4	12.7	18.0
STALL LENGTH OF LINE	B	18.5	20.0	22.0	25.0	34.1
STALL DEPTH TO WALL	C	18.5	19.5	19.0	17.5	17.1
AISLE WIDTH BETWEEN STALL LINES	D	26.0	23.0	16.0	12.0	10.0
STALL DEPTH, INTERLOCK	E	18.5	18.8	17.5	15.3	13.2
MODULE, WALL TO INTERLOCK	F	63.0	61.3	52.5	44.8	40.3
MODULE, INTERLOCKING	G	63.0	61.0	51.0	42.6	36.4
MODULE, INTERLOCK TO CURB FACE	H	60.5	58.8	50.2	42.8	38.8
BUMPER OVERHANG (TYPICAL)	I	2.5	2.5	2.3	2.0	1.5
OFFSET	J	0.0	0.5	2.7	6.3	13.5
SETBACK	K	0.0	5.0	8.3	11.0	16.0
CROSS AISLE, ONE-WAY	L	14.0	14.0	14.0	14.0	14.0
CROSS AISLE, TWO-WAY	–	24.0	24.0	24.0	24.0	24.0

NOTE: ANY PARKING LAYOUT OTHER THAN SHOWN MUST BE APPROVED BY THE CITY TRAFFIC ENGINER.

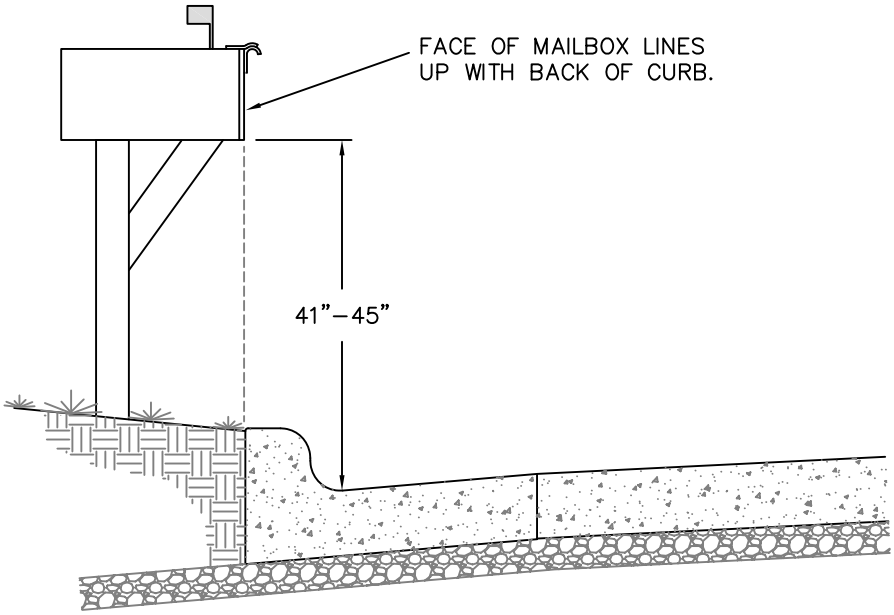

IMPROVED STREETS

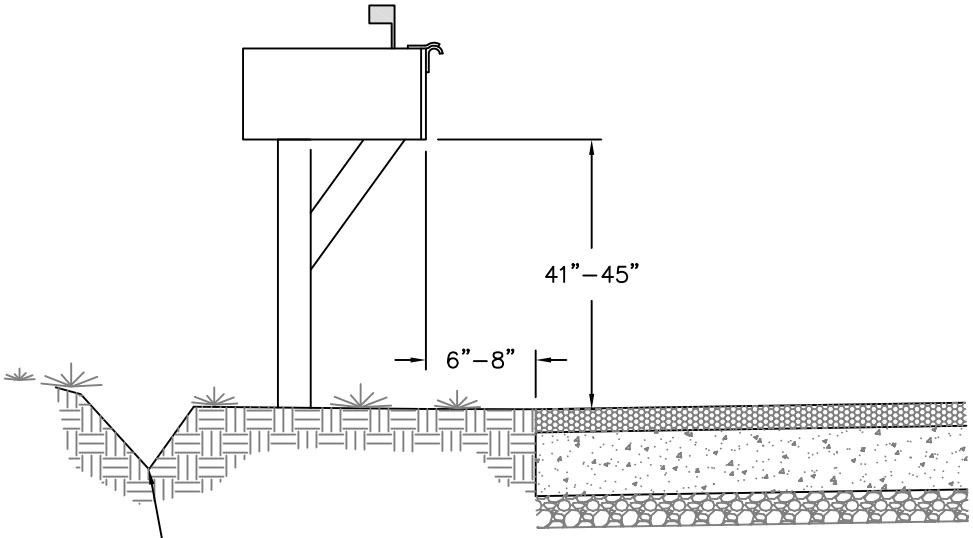

UNIMPROVED STREETS

NOTE:
DITCH SECTION BEHIND MAILBOX
WITH A PEDESTRIAN CROSSING.

DEPARTMENT OF PUBLIC WORKS SPRINGFIELD, MO.	MAILBOX REPLACEMENT	REVISED: 7/1/2013 ST–7

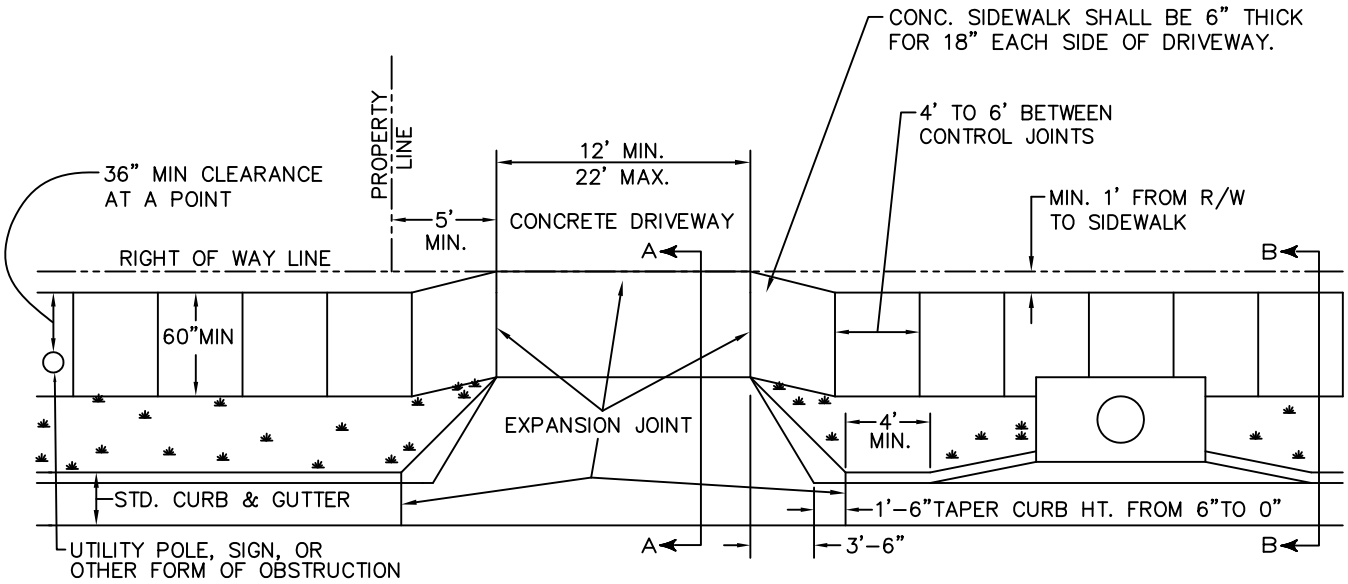

TYPICAL DRIVEWAY PLAN VIEW

NOTE:
ANY PART OF AN ACCESSIBLE ROUTE WITH A RUNNING SLOPE GREATER THAN 1:20 SHALL BE CONSIDERED A RAMP AND SHALL COMPLY WITH THOSE REGULATIONS.

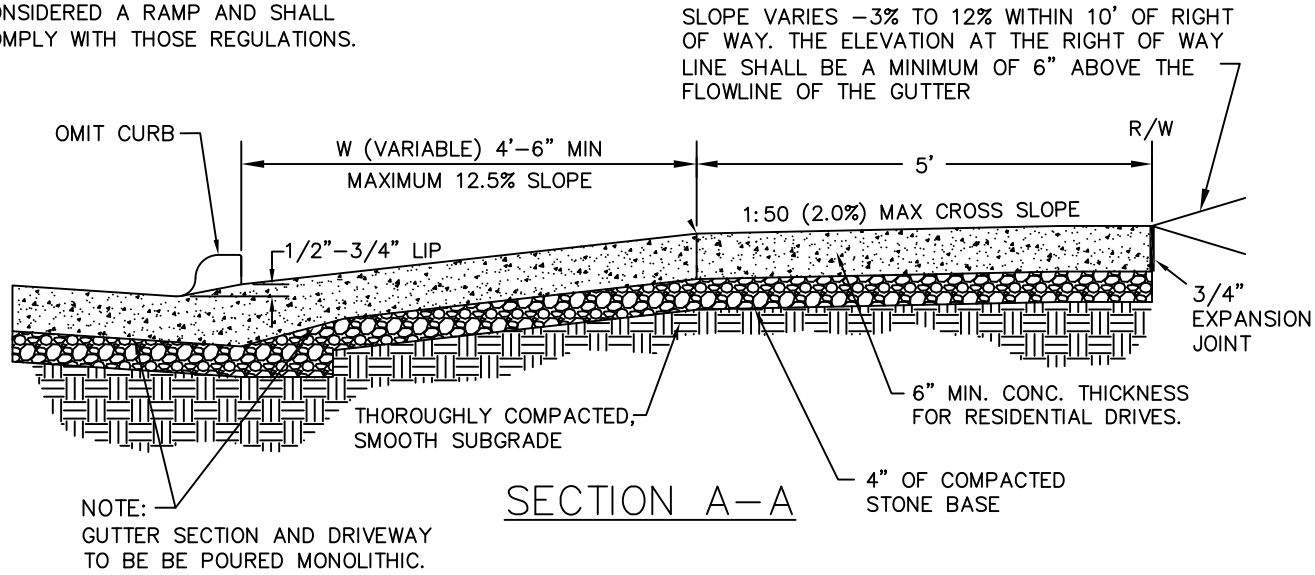

SECTION A-A

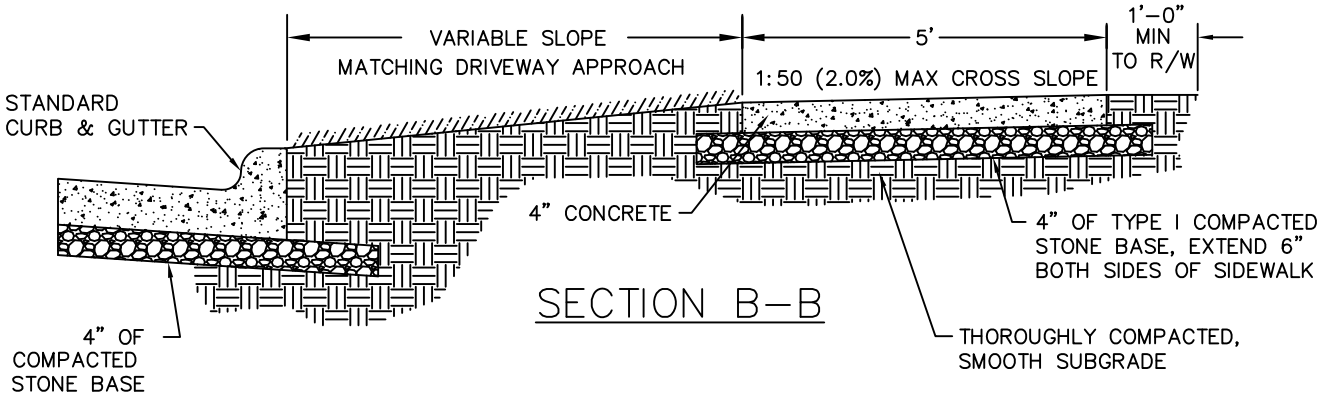

SECTION B-B

DEPARTMENT OF PUBLIC WORKS SPRINGFIELD, MO.	TYPICAL RESIDENTIAL DRIVEWAY & SIDEWALK	REVISED: 7/1/2013
		ST-8

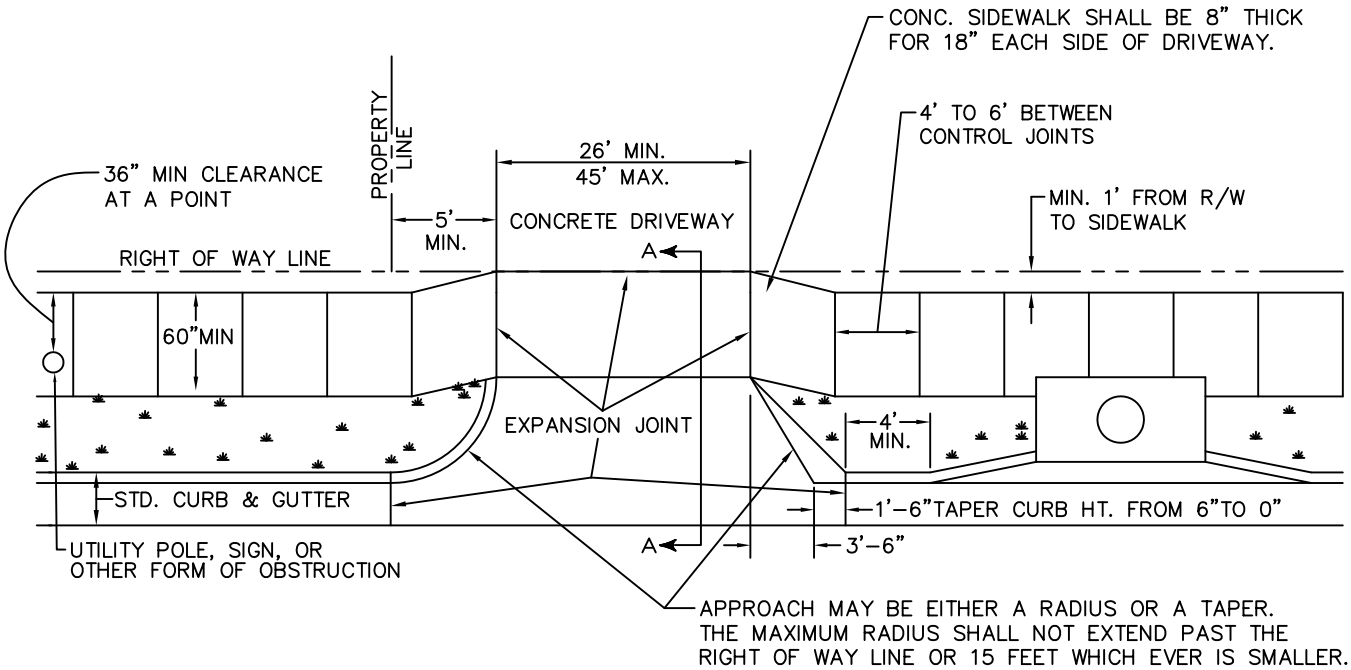

TYPICAL DRIVEWAY PLAN VIEW

NOTE:
ANY PART OF AN ACCESSIBLE ROUTE WITH A RUNNING SLOPE GREATER THAN 1:20 SHALL BE CONSIDERED A RAMP AND SHALL COMPLY WITH THOSE REGULATIONS.

REQUIRED DRIVEWAY GRADES				
	MAJOR ARTERIAL	SECONDARY ARTERIAL	COLLECTOR	NON-RESIDENTIAL LOCAL
A. DRIVEWAY APPROACH GRADE	1/4in/ft to 1/2in/ft	1/4in/ft to 5/8in/ft	1/4in/ft to 3/4in/ft	1/4in/ft to 1in/ft
B. MAXIMUM CHANGE OF GRADE AT BACK OF SIDEWALK	4%	5%	6%	8%
C. SLOPE WITHIN 10 FEET OF RIGHT-OF-WAY LINE	-2% to 6% 1/4in/ft to 3/4in/ft	-3% to 7% -3/8in/ft to 7/8in/ft	-4% to 8% -1/2in/ft to 1in/ft	-6% to 10% -3/4in/ft to 1-1/4in/ft

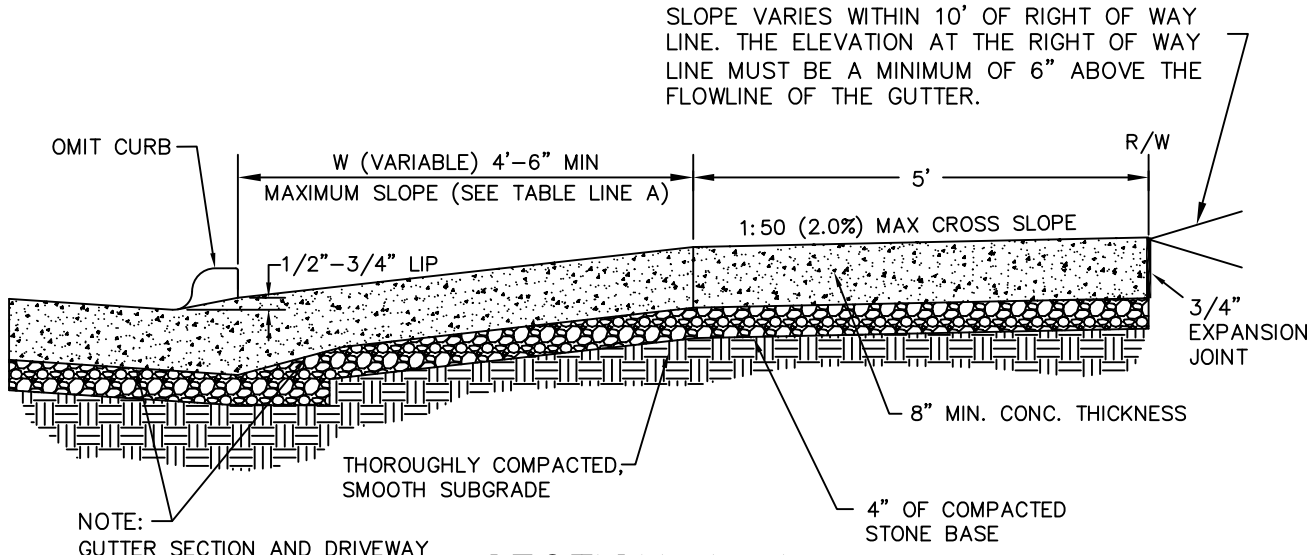

SECTION A-A

REVISED: 10-17-05; REMOVED REINFOREMENT REQUIREMENTS.

DEPARTMENT OF PUBLIC WORKS SPRINGFIELD, MO.	TYPICAL COMMERCIAL DRIVEWAY & SIDEWALK	REVISED: 7/1/2013 ST-9

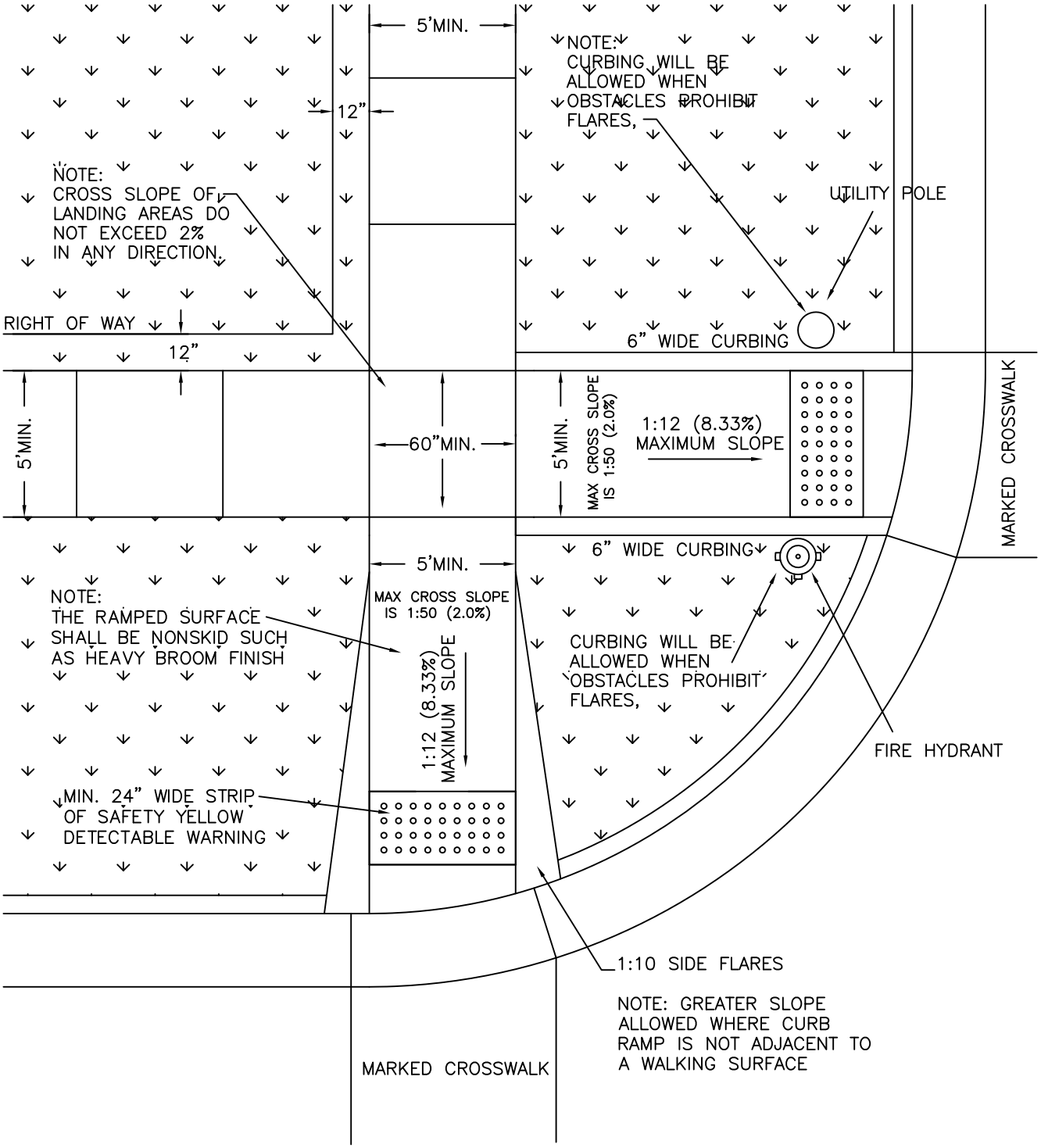

DEPARTMENT OF PUBLIC WORKS SPRINGFIELD, MO.	CURB RAMP TYPE 1	REVISED: 7/1/2013 ST–10

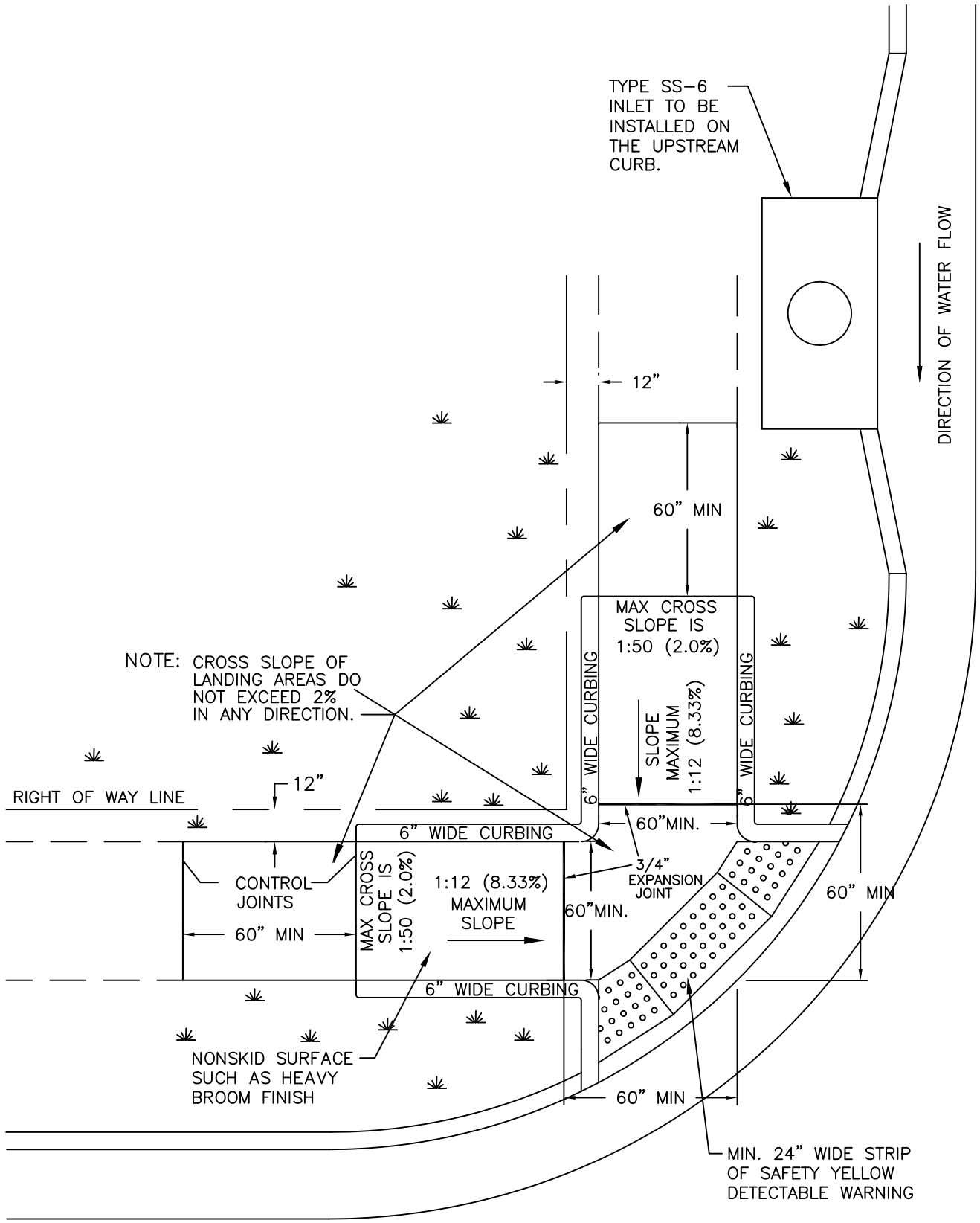

NOTE: USE CURB RAMP STYLE II WHEN DISTANCE FROM FACE OF CURB AND THE RIGHT OF WAY LINE IS LESS THAN AN ALLOWABLE DISTANCE TO INSTALL A CURB RAMP TYPE I WITH A 1:12 (8.33%) RUNNING SLOPE.

DEPARTMENT OF PUBLIC WORKS SPRINGFIELD, MO.	CURB RAMP TYPE II	REVISED: 7/1/0213 ST-11

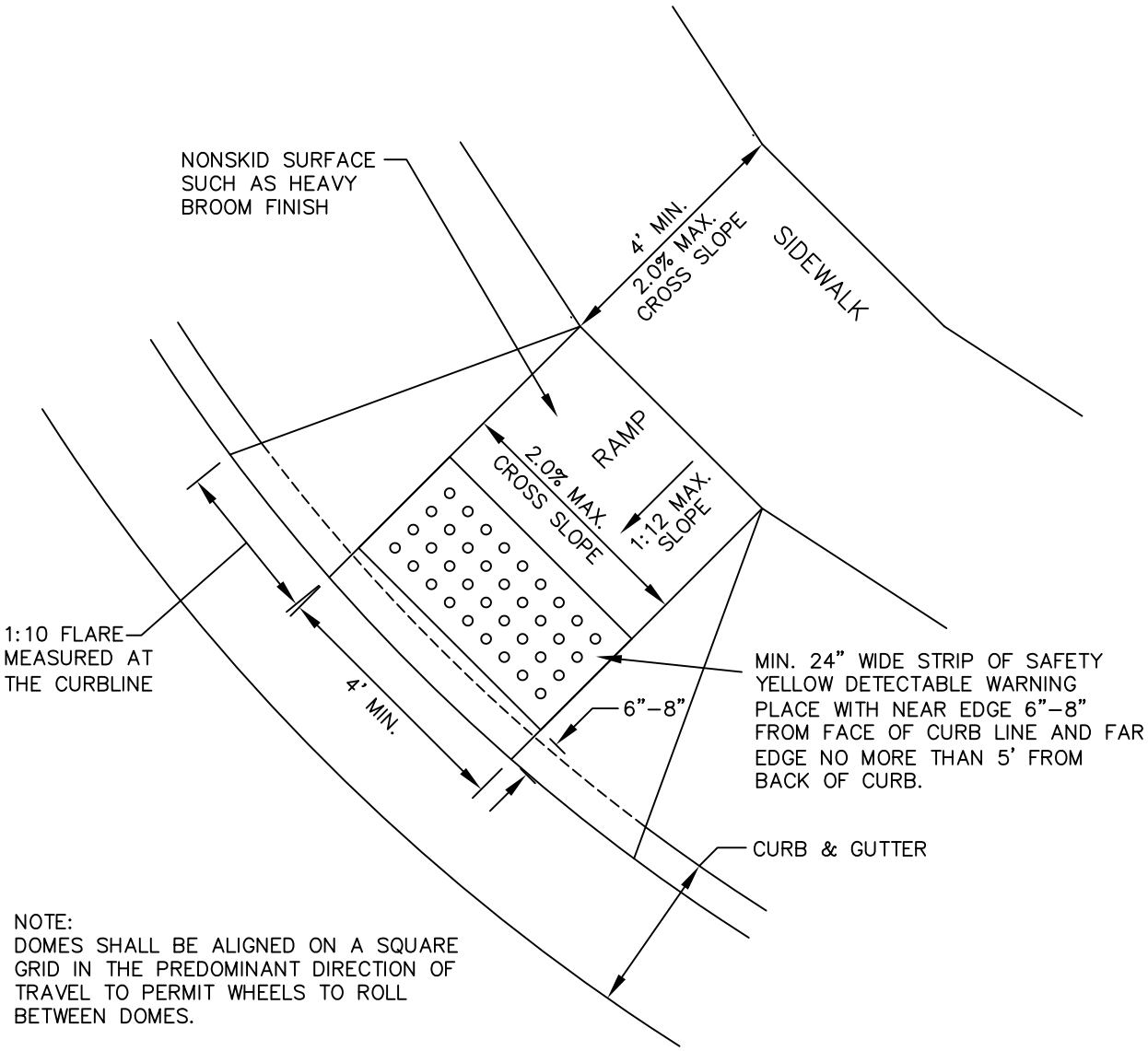

NOTE:
DOMES SHALL BE ALIGNED ON A SQUARE GRID IN THE PREDOMINANT DIRECTION OF TRAVEL TO PERMIT WHEELS TO ROLL BETWEEN DOMES.

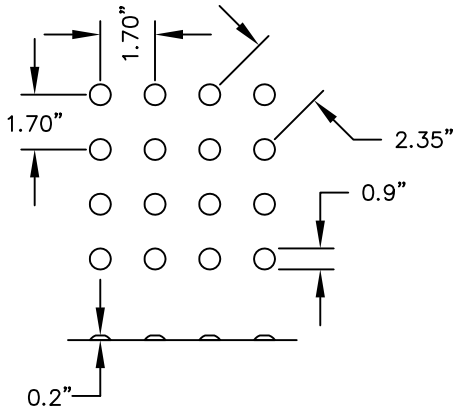

DOME SPACING

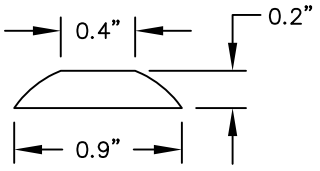

DOME SECTION

DEPARTMENT OF PUBLIC WORKS SPRINGFIELD, MO.	CURB RAMP WITH DETECTABLE WARNING	REVISED: 7/1/2013 ST–12

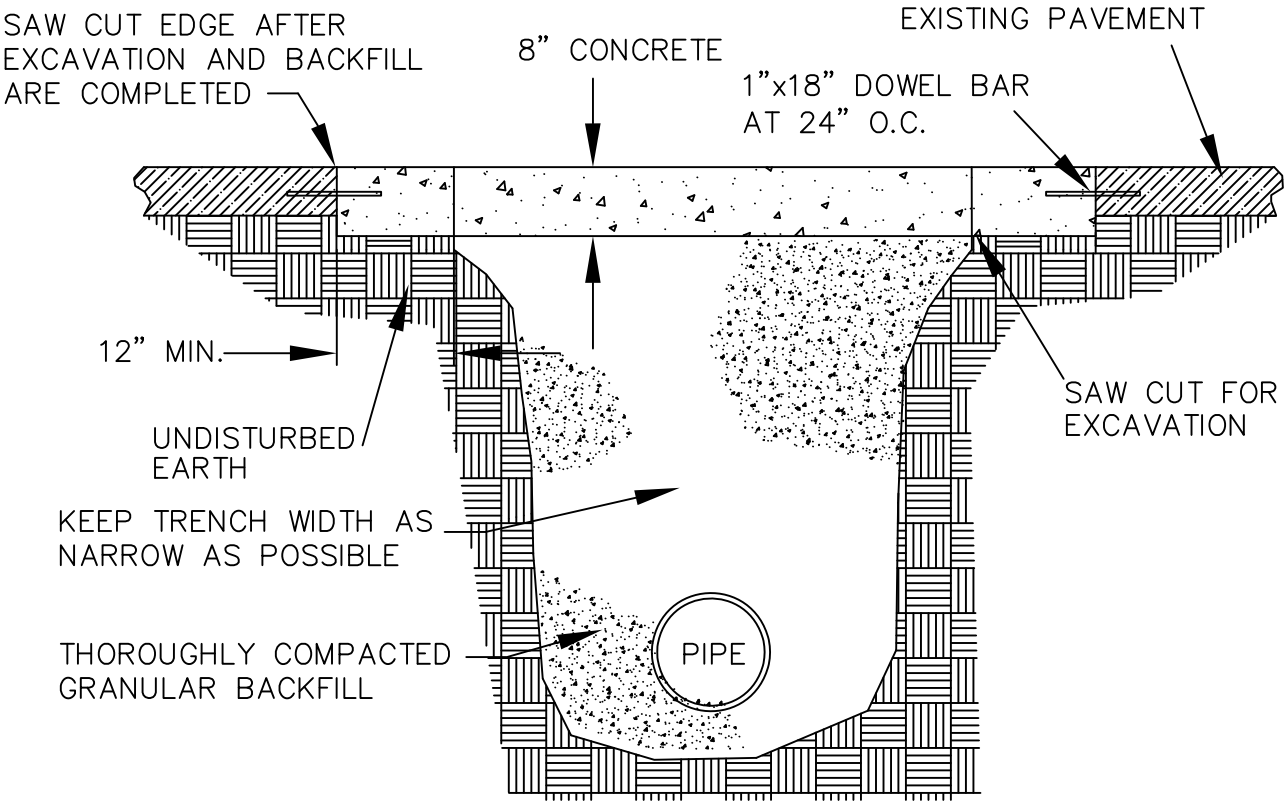

NOTES:

*OMIT DOWEL BARS WHEN REPAIRING ASPHALT PAVEMENT

*REPAIR SHALL CONFORM TO ALL CONSTRUCTION JOINT REQUIREMENTS

DEPARTMENT OF PUBLIC WORKS SPRINGFIELD, MO.	EXISTING PAVEMENT REPAIR DETAIL	ADOTPED: 7-1-2015 ST-13

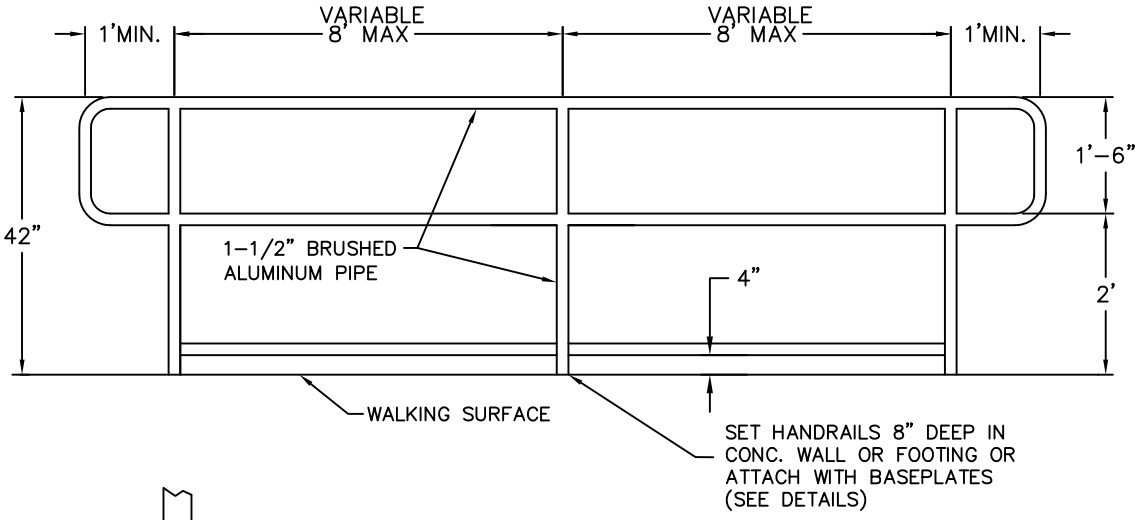

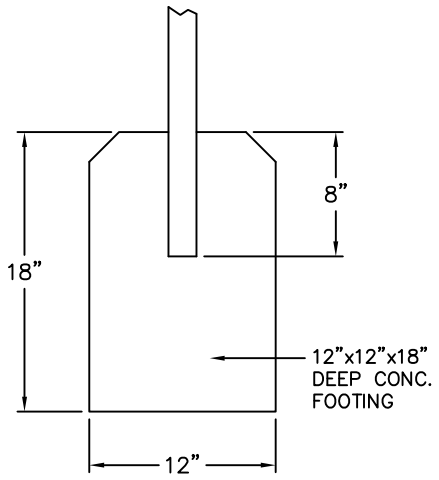

CONC. FOOTING DETAIL

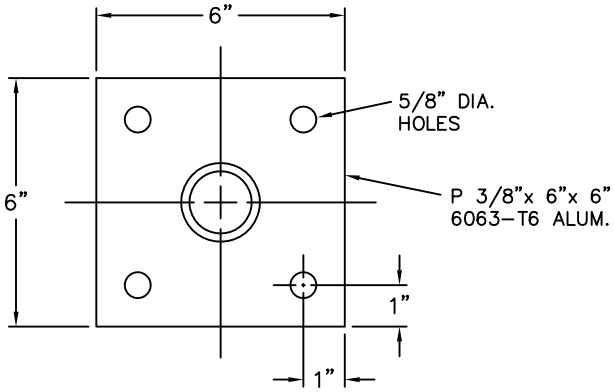

BASEPLATE DETAIL

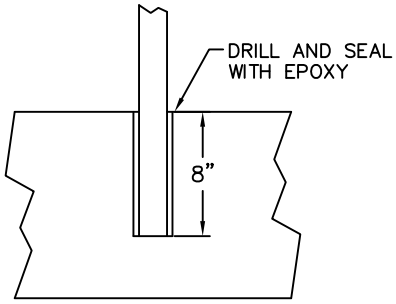

HEADWALL DETAIL

RAILING & POST SPECIFICATIONS		
TYPE	SIZE (DIA.)	WEIGHT (LBS./FT.)
ROUND	1-1/2"	ALUMINUM 0.940

GENERAL NOTES:

RAILINGS, POSTS, AND BASEPLATES SHALL BE ALUMINUM ALLOY 6061-T6 OR 6063-T6.

IF PRE-MANUFACTURED HANDRAIL COMPONENTS ARE TO BE USED, PRIOR APPROVAL IS REQUIRED.

ALL JOINTS SHALL BE CONTINUOUS WELDED.

DEPARTMENT OF PUBLIC WORKS SPRINGFIELD, MO.	HANDRAIL	REVISED: 7/1/2013
		ST-18

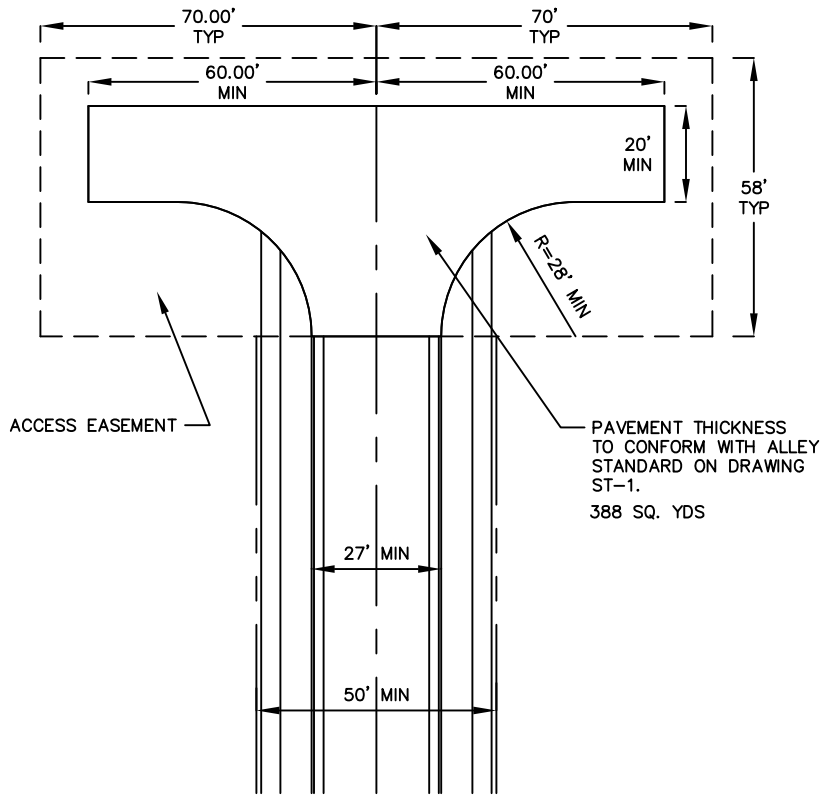

"T" TYPE

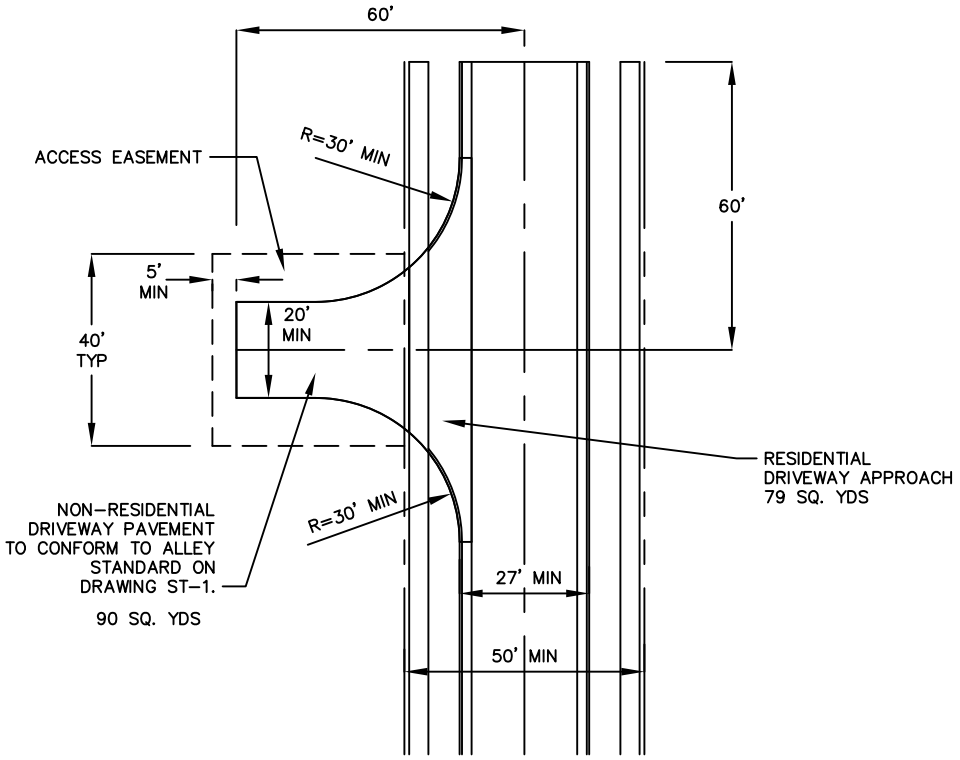

"BRANCH" TYPE

DEPARTMENT OF PUBLIC WORKS SPRINGFIELD, MO.	TEMPORARY DEAD END STREET TURNAROUND	ADOPTED: DRAFT ST-19

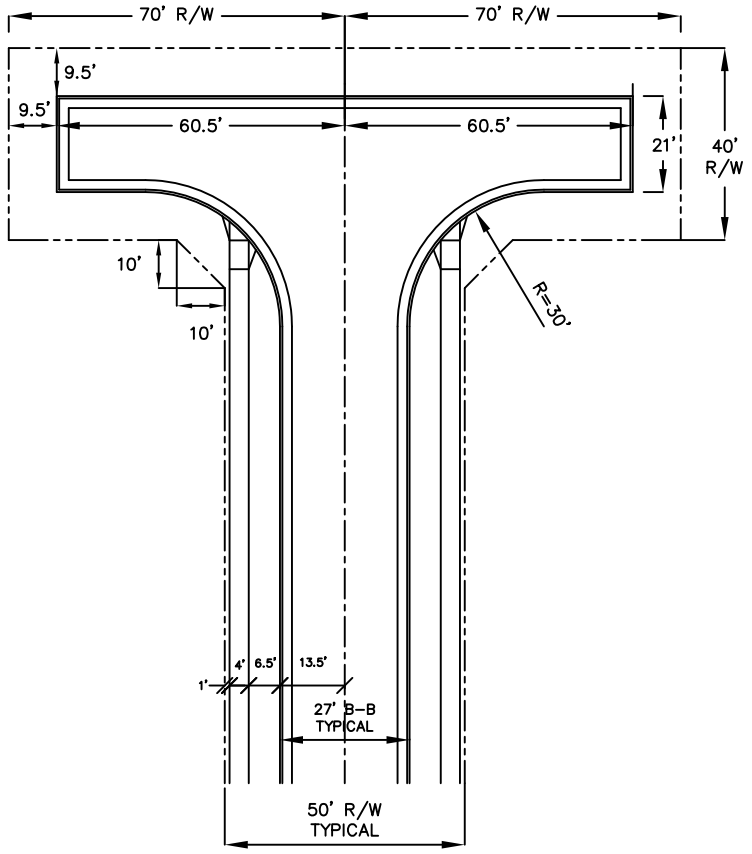

" T " TYPE

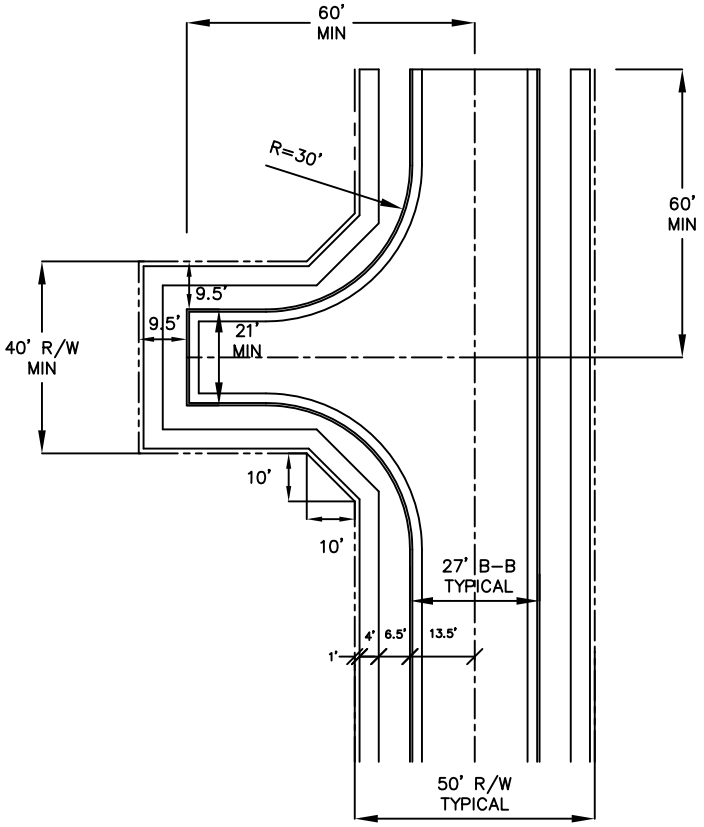

" BRANCH " TYPE

DEPARTMENT OF PUBLIC WORKS SPRINGFIELD, MO.	PERMANENT DEAD END STREET TURNAROUND	ADOPTED: DRAFT ST-20