CONVENTIONAL SIGNAL HEAD WITH BACKPLATE

OPTICALLY LIMITING SIGNAL HEAD WITH BACKPLATE

PEDESTRIAN SIGNAL HEAD

EXISTING SIGNAL HEAD

OVERHEAD OR SHAFT MOUNTED SIGN

LUMINAIRE

CONTROLLER

(FRONT DOOR OF CABINET)

S SPLICE CABINET

PULL BOX

CONCRETE BASE

POWER SUPPLY

PEDESTRIAN PUSHBUTTON

STOP LINE

LANE USE

MAST ARM W/SIGNAL HEAD & LUMINAIRE

INDUCTION LOOP DETECTOR

VIDEO IMAGE DETECTOR

RADAR DETECTOR

R	RED BALL*
Y	YELLOW BALL*
G	GREEN BALL*
YL	YELLOW LEFT ARROW*
L	GREEN LEFT ARROW*
W	WALK (MAN SYMBOL)
DW	DON'T WALK (HAND SYMBOL)
	EXISTING CONTROLLER
S	EXISTING SPLICE CABINET
	EXISTING PULL BOX
	EXISTING CONCRETE BASE
21	SIGNAL FACE NUMBER
2	POST NUMBER
21	DETECTOR NUMBER
2	PULL BOX NUMBER

EXISTING MAST ARM

CONDUIT

BORED CONDUIT

EXISTING CONDUIT

4" PVC	SIZE & TYPE OF CONDUIT
2-16C#12	NUMBER, CONDUCTORS, & AWG SIZE OF CABLE

* - ALL 12" LENS WITH TUNNEL VISOR

NOT TO SCALE

DEPARTMENT OF PUBLIC WORKS SPRINGFIELD, MO.	**SIGNAL SYMBOLS**	ADOPTED: TS-1

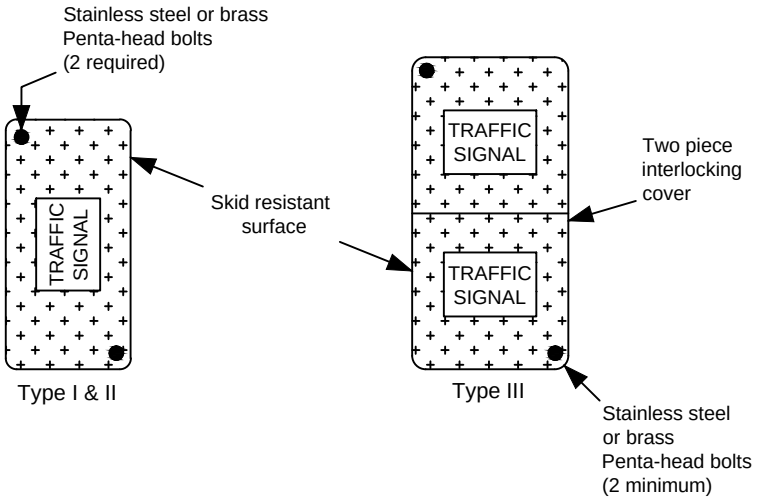

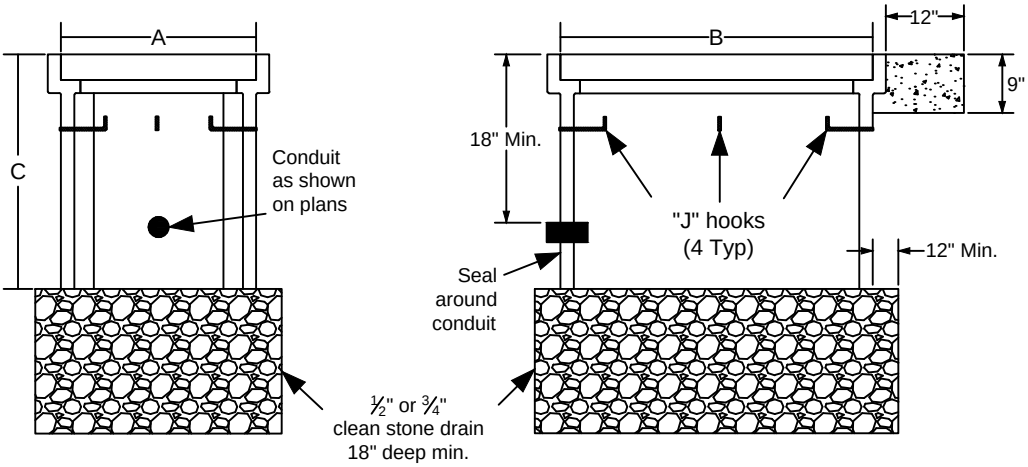

	DIMENSIONS		
	TYPE I	TYPE II	TYPE III
A	17"	24"	30"
B	30"	36"	48"
C	28"	30"	36"

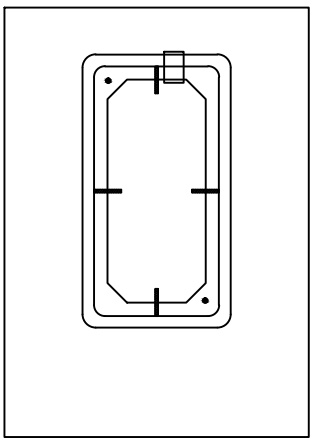

9" Thick concrete
pad 12" all sides

Notes:
1. Preformed pull boxes shall be used unless otherwise specified on the plans.

2. Lift opening is required on all covers.

3. All demensions are nominal.

4. If extensions are needed, they shall be compatable and from the same manufacturer.

NOT TO SCALE

DEPARTMENT OF PUBLIC WORKS SPRINGFIELD, MO.	**PREFORMED PULL BOXES**	ADOPTED: TS-2

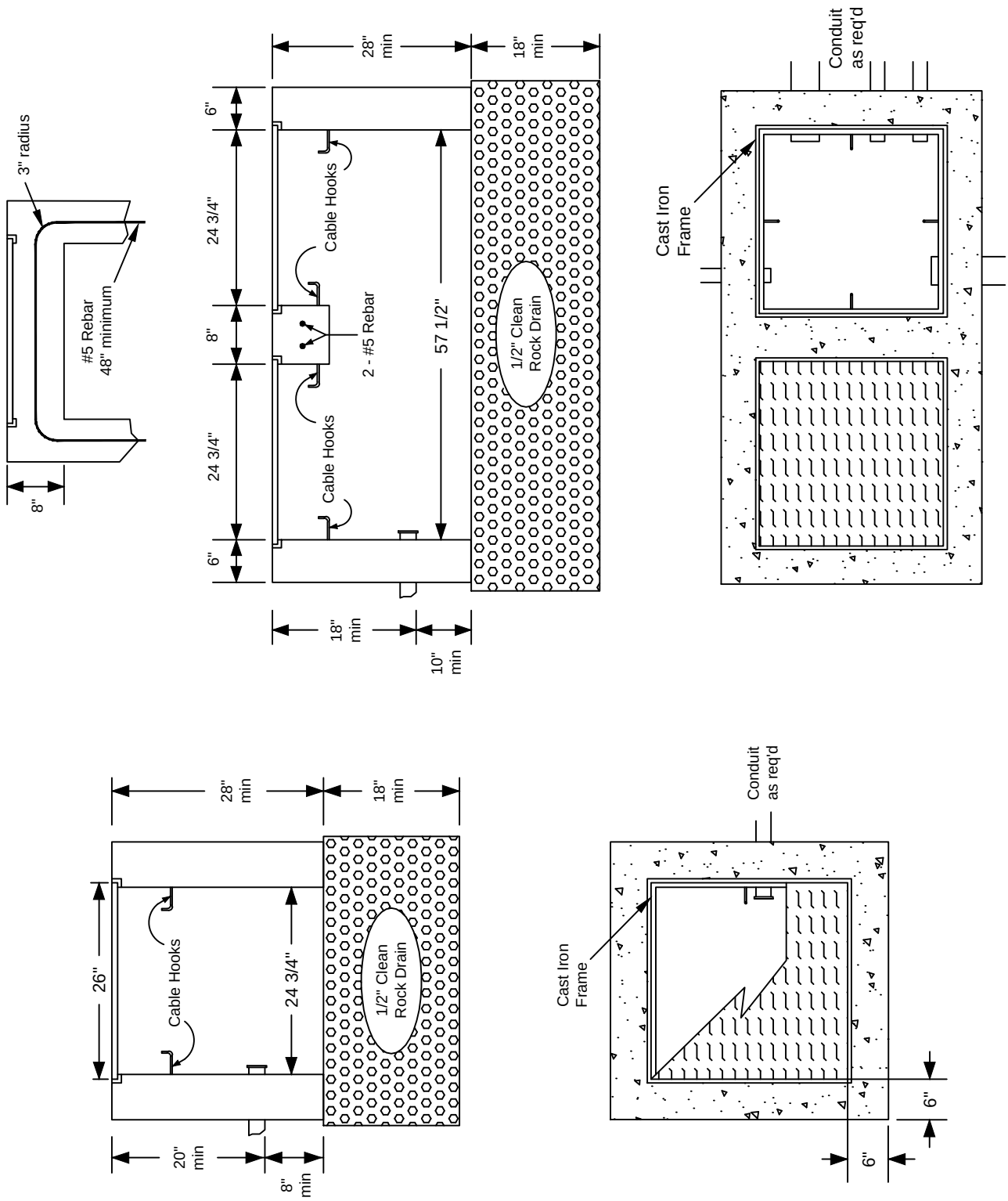

NOT TO SCALE

DEPARTMENT OF PUBLIC WORKS SPRINGFIELD, MO.	**CAST-IN-PLACE PULL BOX**	ADOPTED: TS-3

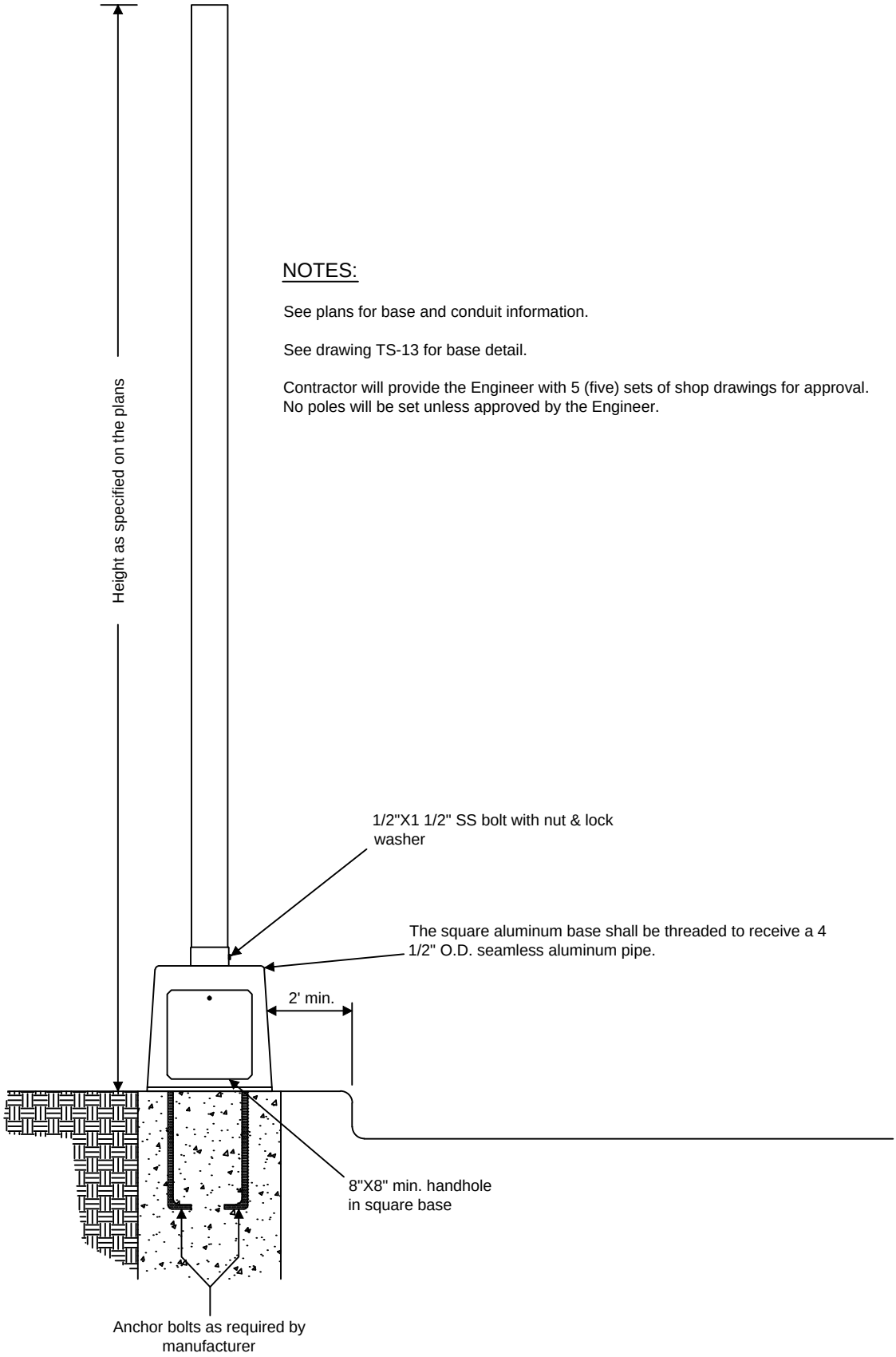

NOTES:

See plans for base and conduit information.

See drawing TS-13 for base detail.

Contractor will provide the Engineer with 5 (five) sets of shop drawings for approval. No poles will be set unless approved by the Engineer.

NOT TO SCALE

DEPARTMENT OF PUBLIC WORKS SPRINGFIELD, MO.	**ALUMINUM PEDESTAL**	ADOPTED: TS-4

TYPE A

See plans for arm length and signal spacing details

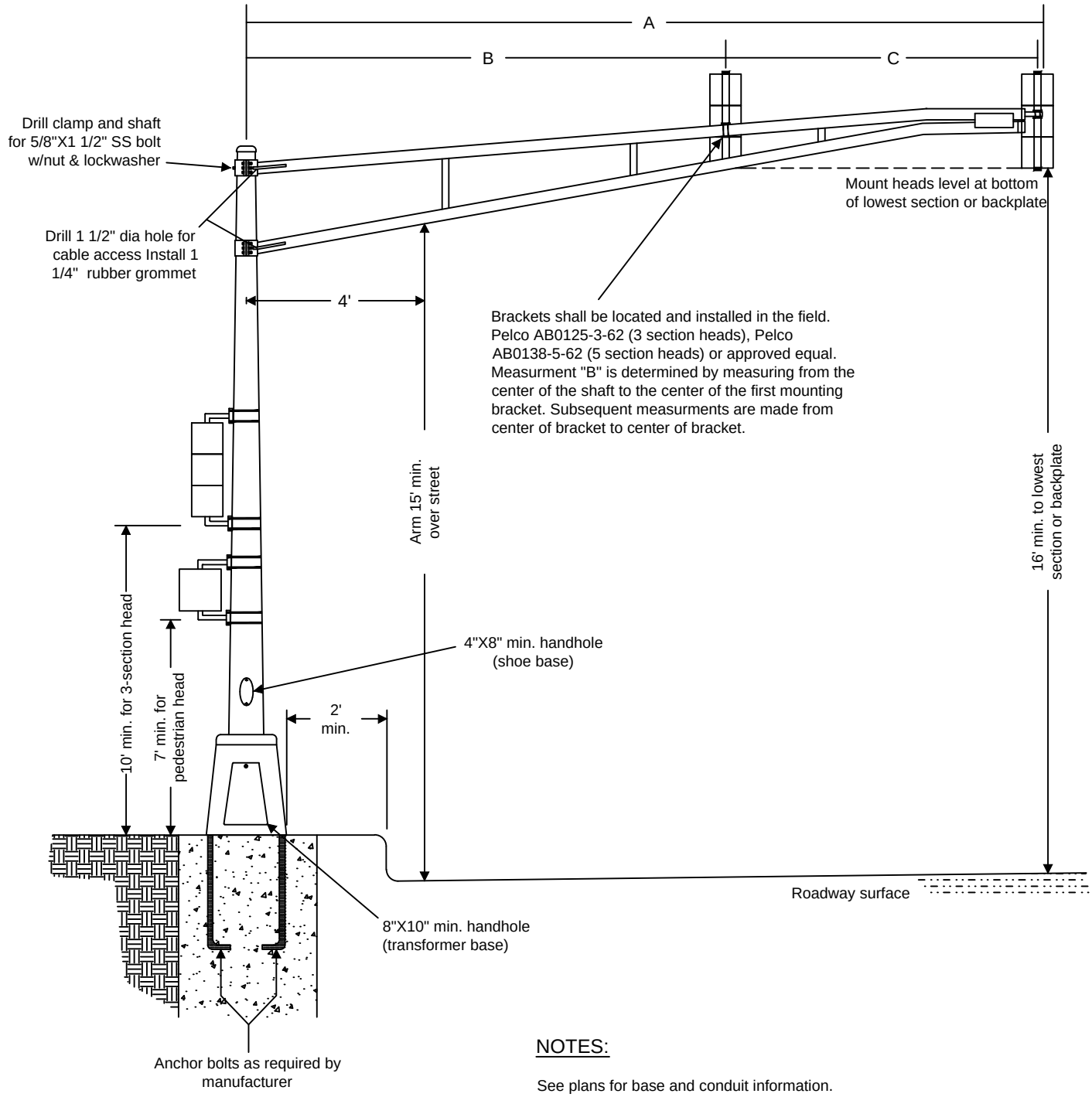

NOTES:

See plans for base and conduit information.

A transformer base will be provided with Mast Arms 25' or less in length. Mast arms greater than 25' require shafts equiped with a shoe base.

Contractor will provide the Engineer with 5 (five) sets of shop drawings for approval. No poles will be set unless approved by the Engineer.

NOT TO SCALE

DEPARTMENT OF PUBLIC WORKS SPRINGFIELD, MO.	**ALUMINUM MAST ARM**	ADOPTED:
		TS-5

TYPE S

See plans for arm length and signal spacing details

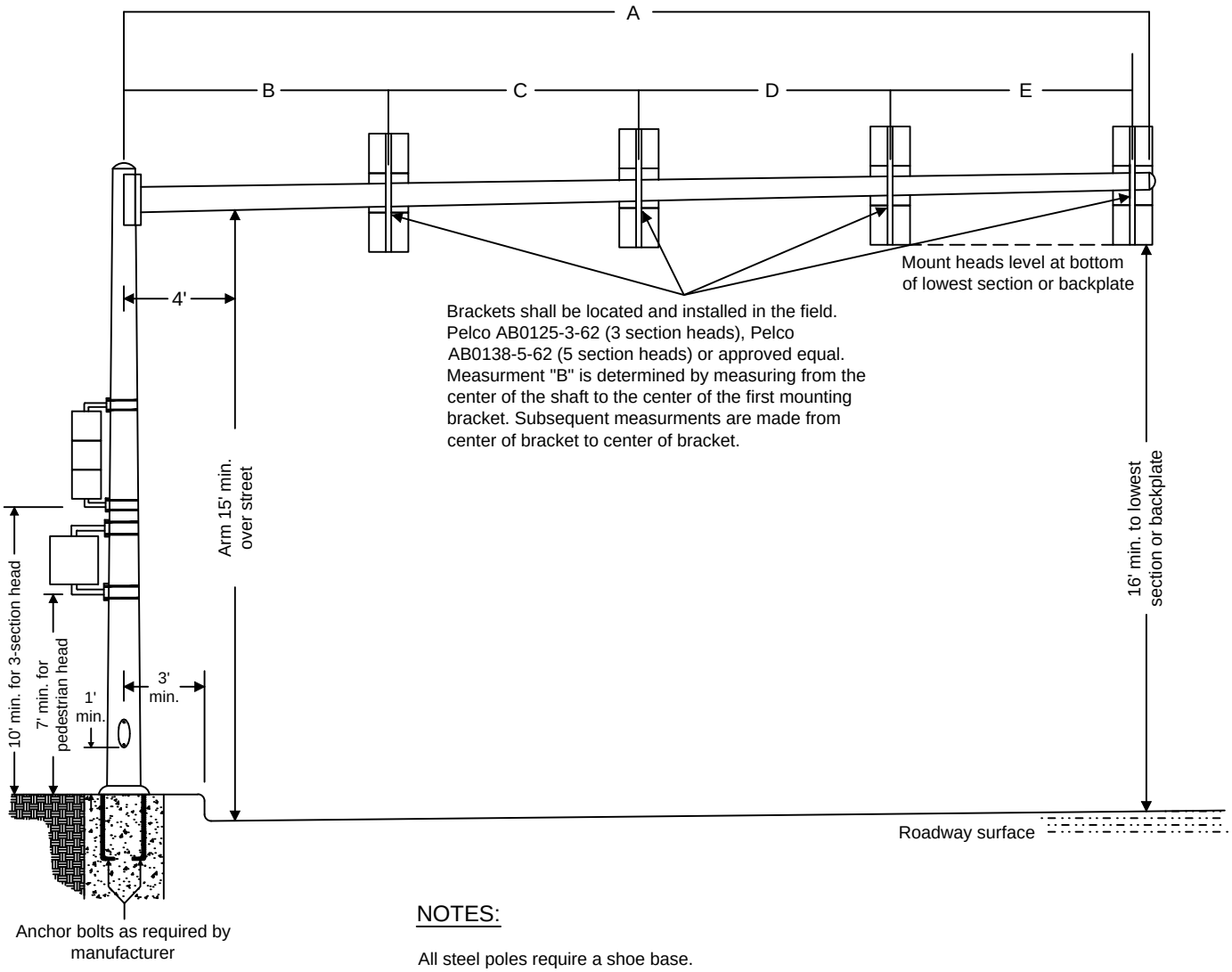

NOTES:

All steel poles require a shoe base.

See plans for base and conduit information.

Contractor will provide the Engineer with 5 (five) sets of shop drawings for approval. No poles will be set unless approved by the Engineer.

NOT TO SCALE

DEPARTMENT OF PUBLIC WORKS SPRINGFIELD, MO.	**STEEL MAST ARM**	ADOPTED:
		TS-6

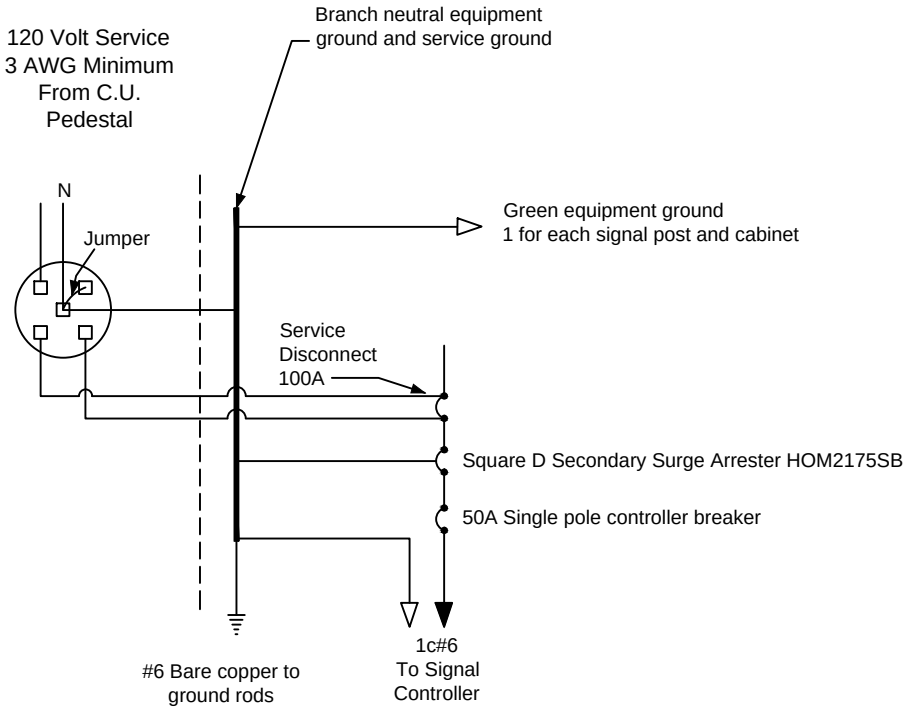

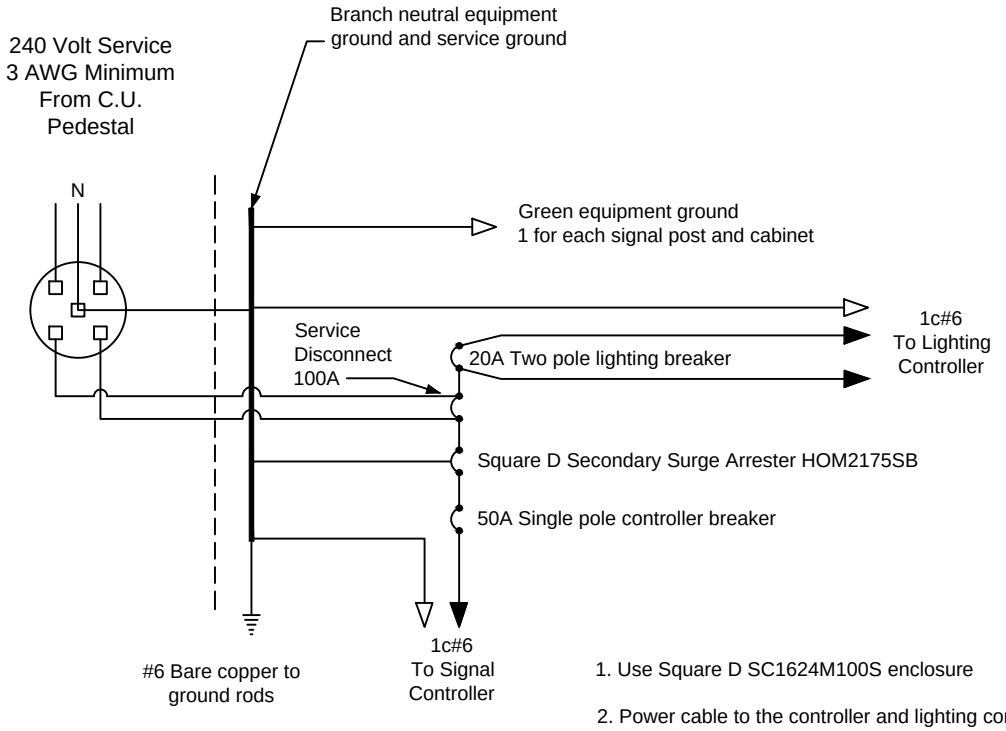

1. Use Square D SC1624M100S enclosure

2. Power cable to the controller and lighting controller shall be black and one white neutral - do not mark with tape.

NOT TO SCALE

DEPARTMENT OF PUBLIC WORKS SPRINGFIELD, MO.	**POWER SUPPLY WIRING**	ADOPTED: TS-7

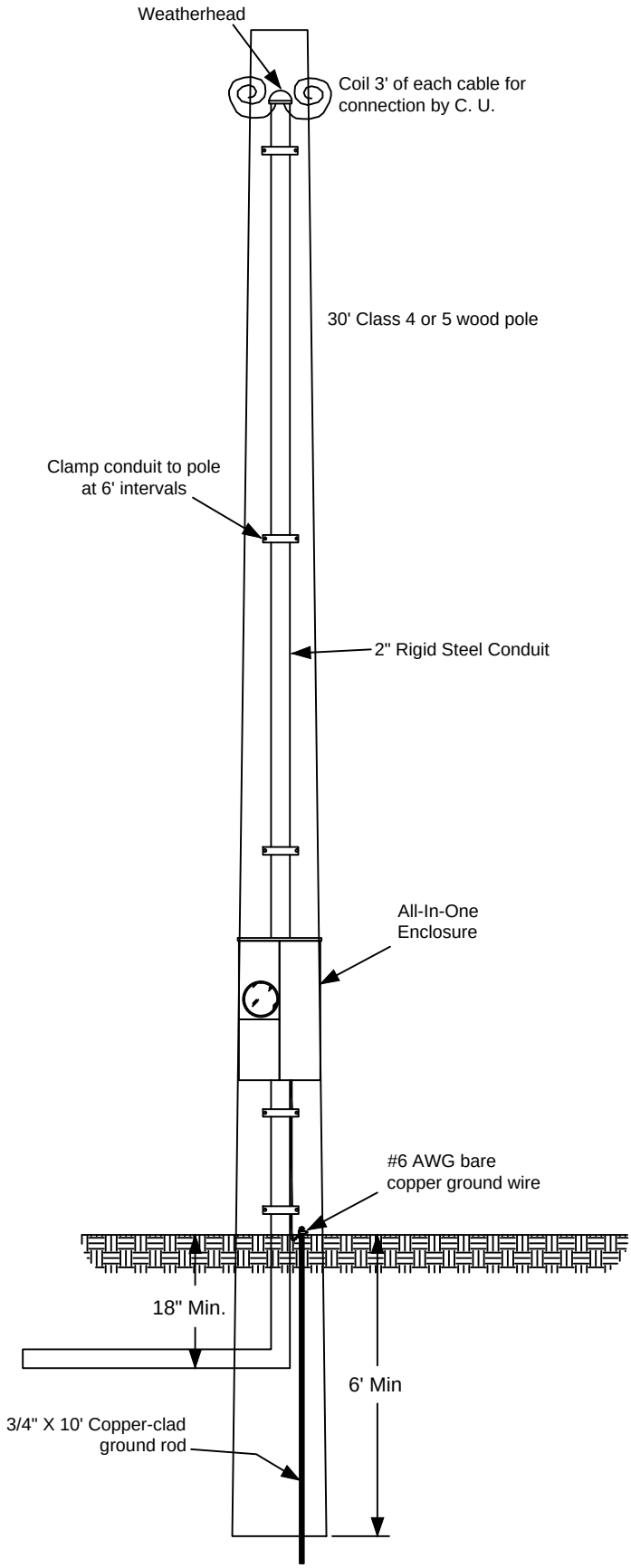

NOT TO SCALE

DEPARTMENT OF PUBLIC WORKS SPRINGFIELD, MO.	**TYPE I POWER SUPPLY**	ADOPTED: TS-8

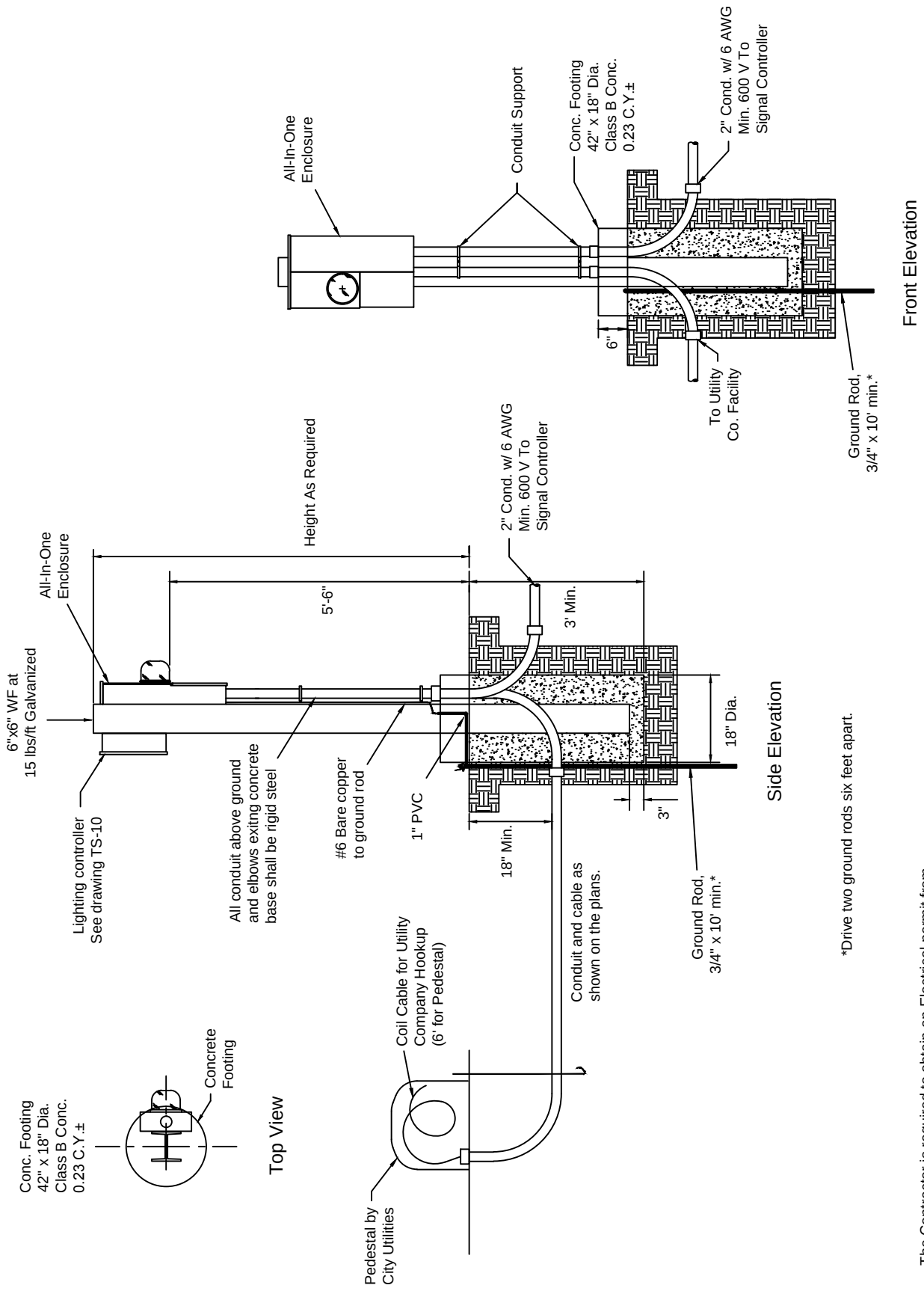

The Contractor is required to obtain an Electrical permit from Building Development Services for new or relocated power supplies. The permit fee is the responsibility of the Contractor.

NOT TO SCALE

DEPARTMENT OF PUBLIC WORKS SPRINGFIELD, MO.	**TYPE II POWER SUPPLY**	ADOPTED:
		TS-9

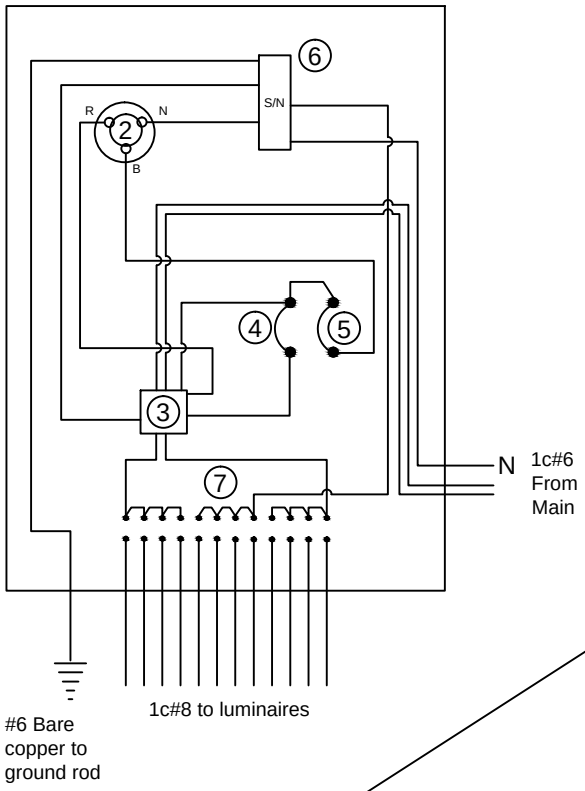

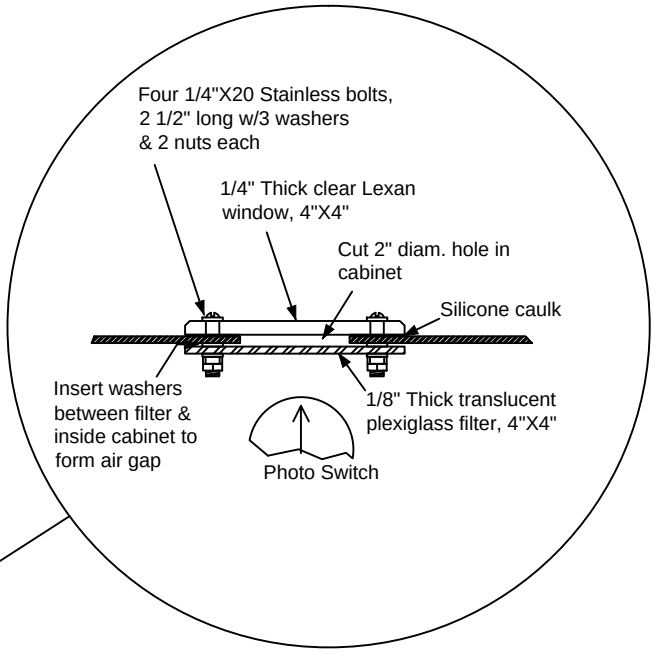

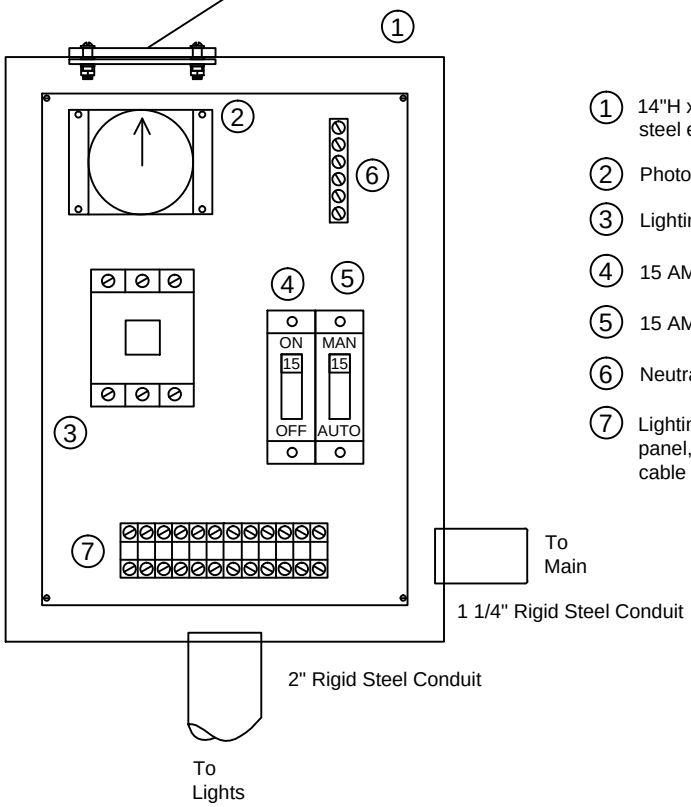

1. 14"H x 12"W x 6"D 14 Ga. watertight aluminum or stainless steel enclosure
2. Photoelectric Switch & Socket, 240V
3. Lighting Contactor, 2 Pole, 60 Amp, 240 V
4. 15 AMP single pole Control Breaker, 240 V
5. 15 AMP single pole Auto-Manual Switch, 240 V
6. Neutral Terminal Strip
7. Lighting Terminal Block, 600V, 12 position, insulated from back panel, barrier between each terminal & each end, accept #8 AWG cable

NOT TO SCALE

DEPARTMENT OF PUBLIC WORKS SPRINGFIELD, MO.	**LIGHTING CONTROLLER**	ADOPTED: TS-10

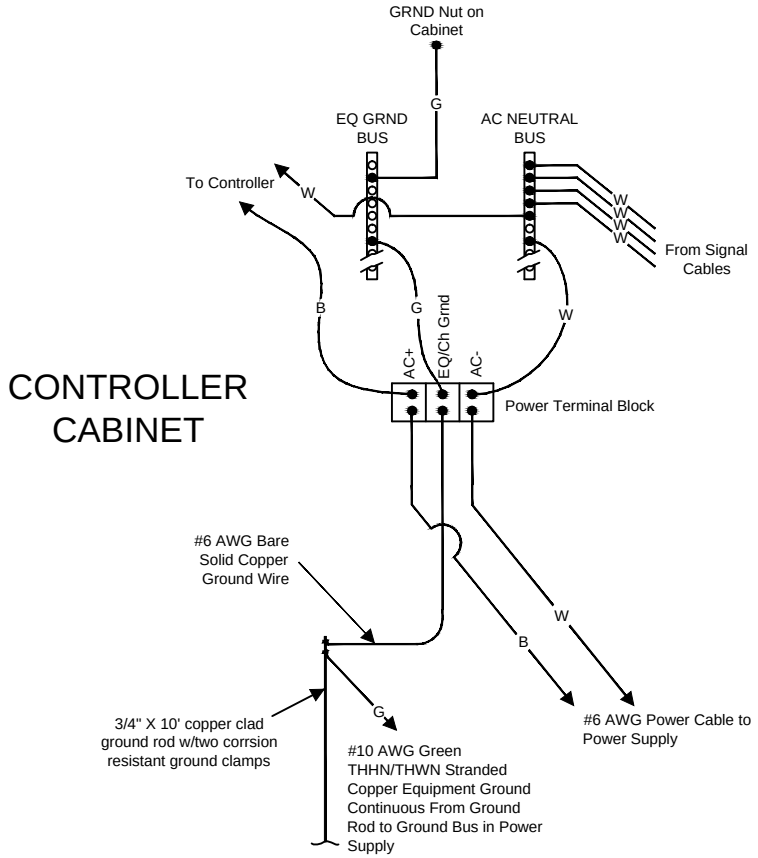

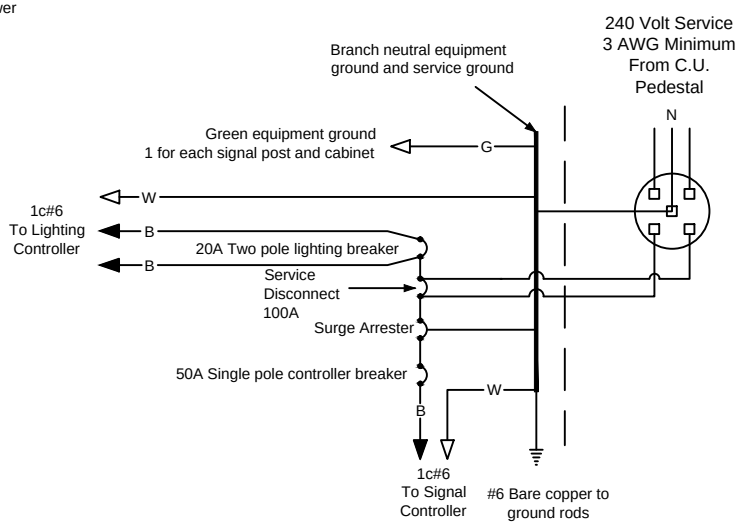

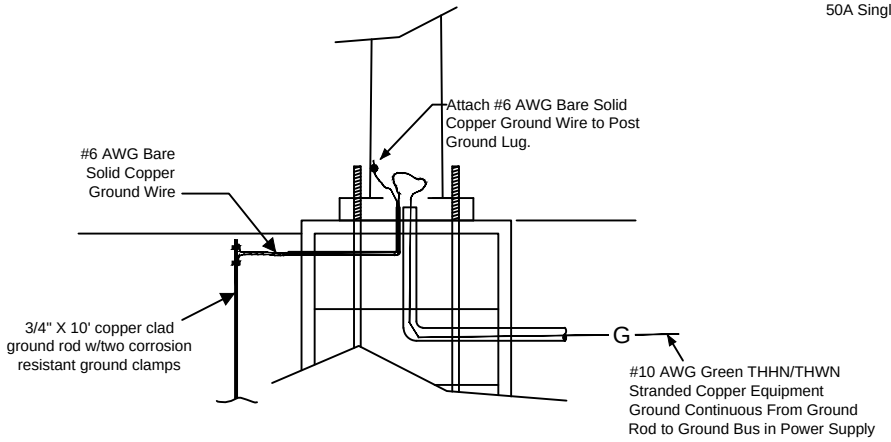

NOT TO SCALE

DEPARTMENT OF PUBLIC WORKS SPRINGFIELD, MO.	**GROUNDING AND BONDING**	ADOPTED:
		TS-11

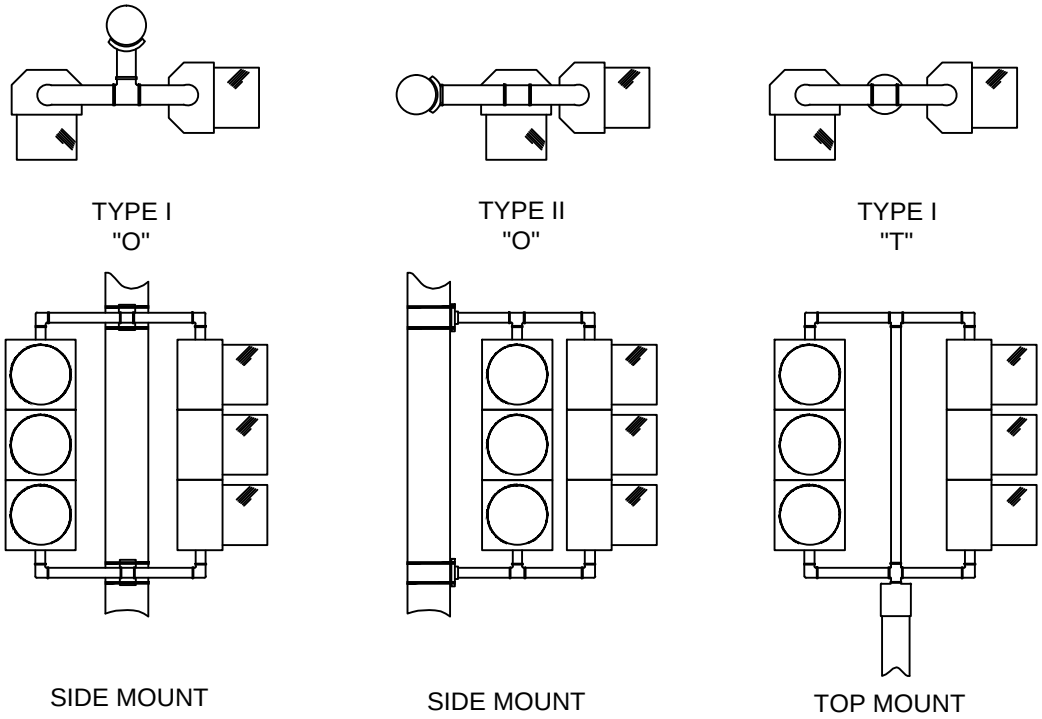

TWO WAY BRACKETS

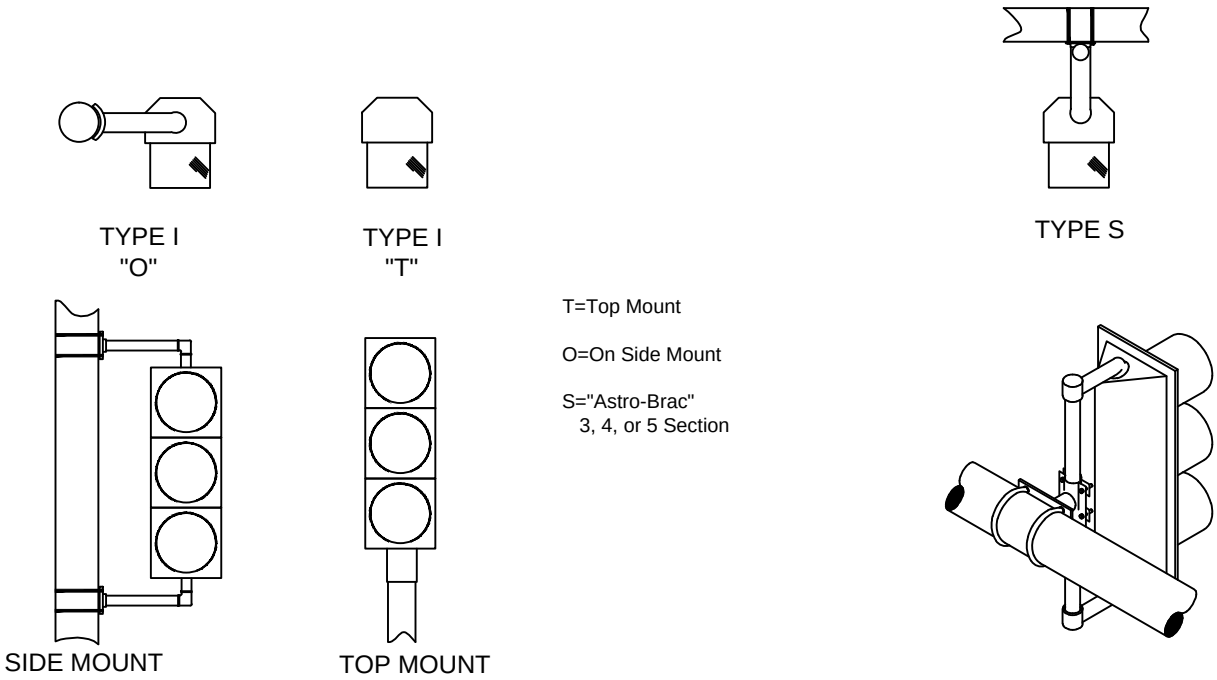

T=Top Mount

O=On Side Mount

S="Astro-Brac"
3, 4, or 5 Section

ONE WAY BRACKETS

ONE WAY BRACKETS

SIDE MOUNT Type I and Type II brackets are atttached to mast arm poles and 10' or 14' pedestals using stainless steel banding.
TOP MOUNT Type I and Type II brackets are attached to 10' or 14' pedestals using an appropriately sized slip fitter.

NOT TO SCALE

DEPARTMENT OF PUBLIC WORKS SPRINGFIELD, MO.	**SIGNAL HEADS**	ADOPTED: TS-12

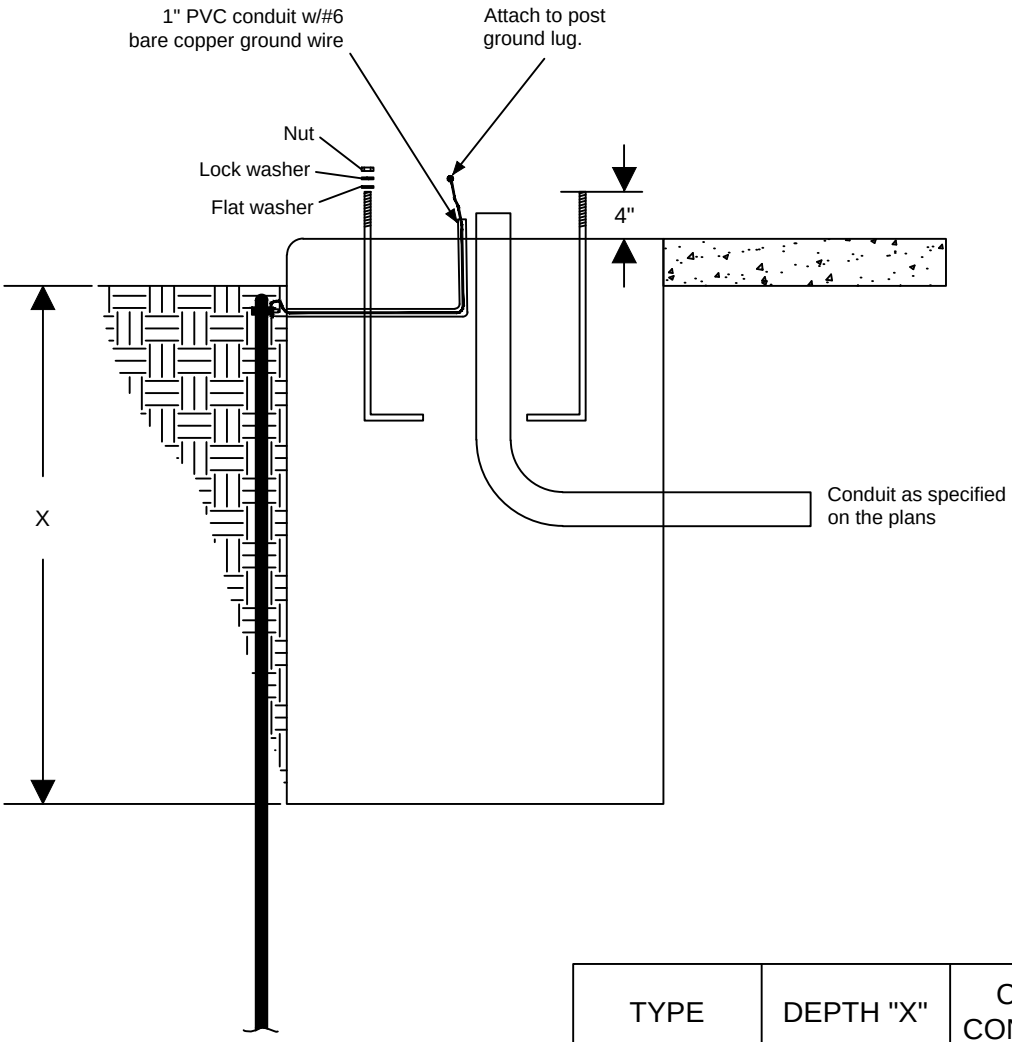

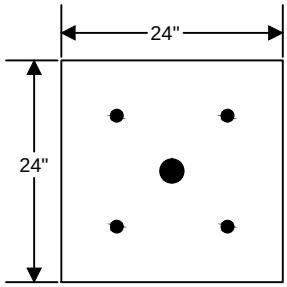

TYPE	DEPTH "X"	Cu. Yd. CONCRETE	SHAFT HEIGHT
A-3	3'	.33	10'
A-4	4'	.59	14'

TYPE "A" SIGNAL BASE NOTES

1. Anchor bolt size, anchor bolt protection, and bolt circle shall be as shown on approved pole drawings.
2. Anchor bolts and conduit shall be held rigidly in place before and during concrete placement. Anchor bolts shall be set in place by means of a template constructed to space the anchor bolts in accordance with the pattern as shown on the manufacturer's approved pole drawings. The center of the template shall correspond to the center of the base.
3. Concrete shall be consolidated by an internal vibrator.
4. Set top of base 4" above grade if in parkway away from sidewalk and form the final 12" of base square. If base is adjacent to or in sidewalk, form the final 6" of base square after the post and mast arm has been set and plumbed. Final top elevation shall match sidewalk.
5. Install preformed expansion material where base abutts sidewalk/concrete.
6. Conduits shall extend a nominal 2" above the base.

NOT TO SCALE

DEPARTMENT OF PUBLIC WORKS SPRINGFIELD, MO.	**TYPE "A" SIGNAL BASE**	ADOPTED:
		TS-13

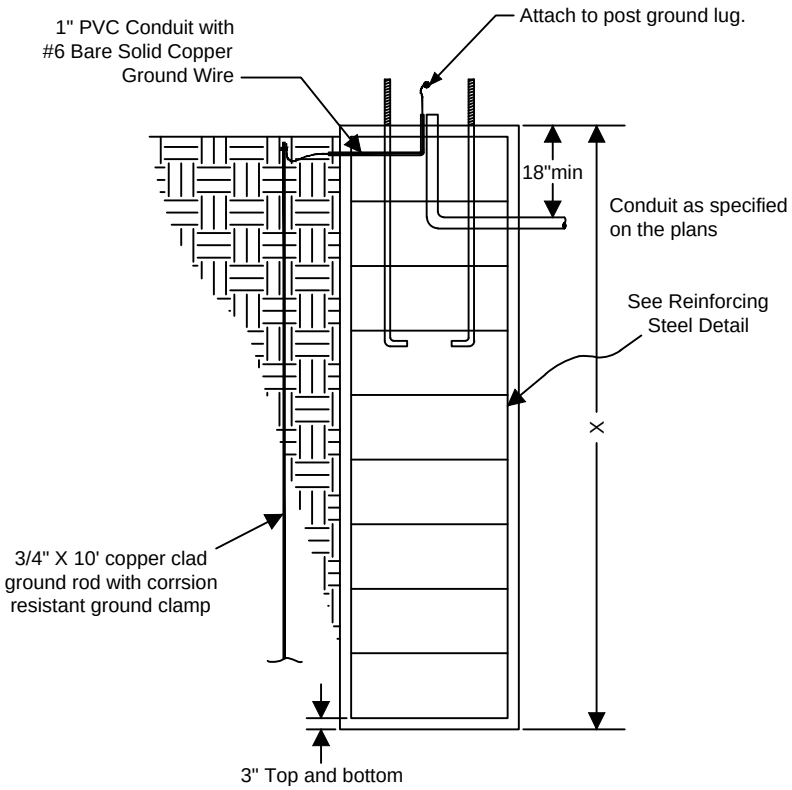

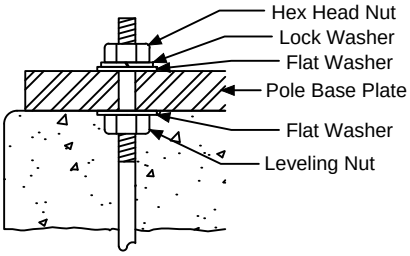

ANCHOR BOLT DETAIL

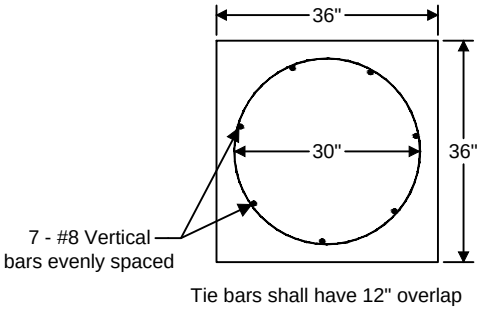

TOP VIEW

TYPE	DEPTH "X"	Cu. Yd. CONCRETE	ARM LENGTH
D-5	5'	1.38	25' or less
D-8	8'	2.16	30-35'
D-10	10'	2.69	40'-45'
D-12	12'	3.21	50'-55'

Mast arms are ordered in 5' increments.
Mast arms 60' or longer require a special base design.

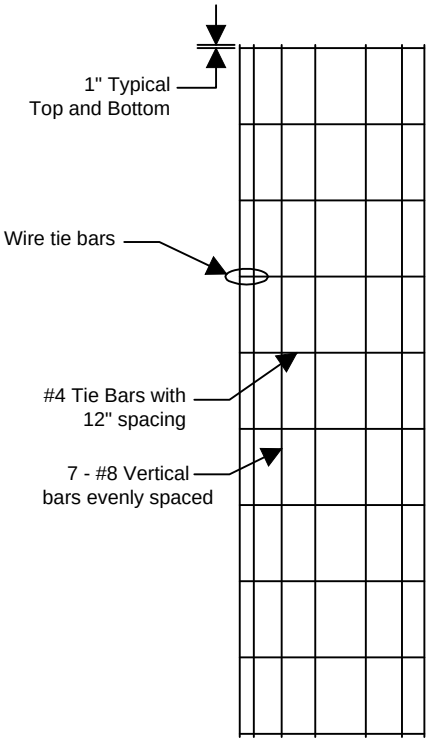

SIDE VIEW

REINFORCING STEEL DETAIL

TYPE "D" SIGNAL BASE NOTES

1. Anchor bolt size, anchor bolt protection, and bolt circle shall be as shown on approved pole drawings.
2. Anchor bolts and conduit shall be held rigidly in place before and during concrete placement. Anchor bolts shall be set in place by means of a template constructed to space the anchor bolts in accordance with the pattern as shown on the manufacturer's approved pole drawings. The center of the template shall correspond to the center of the base.
3. Concrete shall be consolidated by an internal vibrator.
4. Set top of base 4" above grade if in parkway away from sidewalk and form the final 12" of base square. If base is adjacent to or in sidewalk, form the final 6" of base square after the post and mast arm has been set and plumbed. Final top elevation shall match sidewalk.
5. Install preformed expansion material where base abutts sidewalk/concrete.
6. Conduits shall extend a nominal 2" above the base.

NOT TO SCALE

DEPARTMENT OF PUBLIC WORKS SPRINGFIELD, MO.	**TYPE "D" SIGNAL BASE**	ADOPTED:
		TS-14

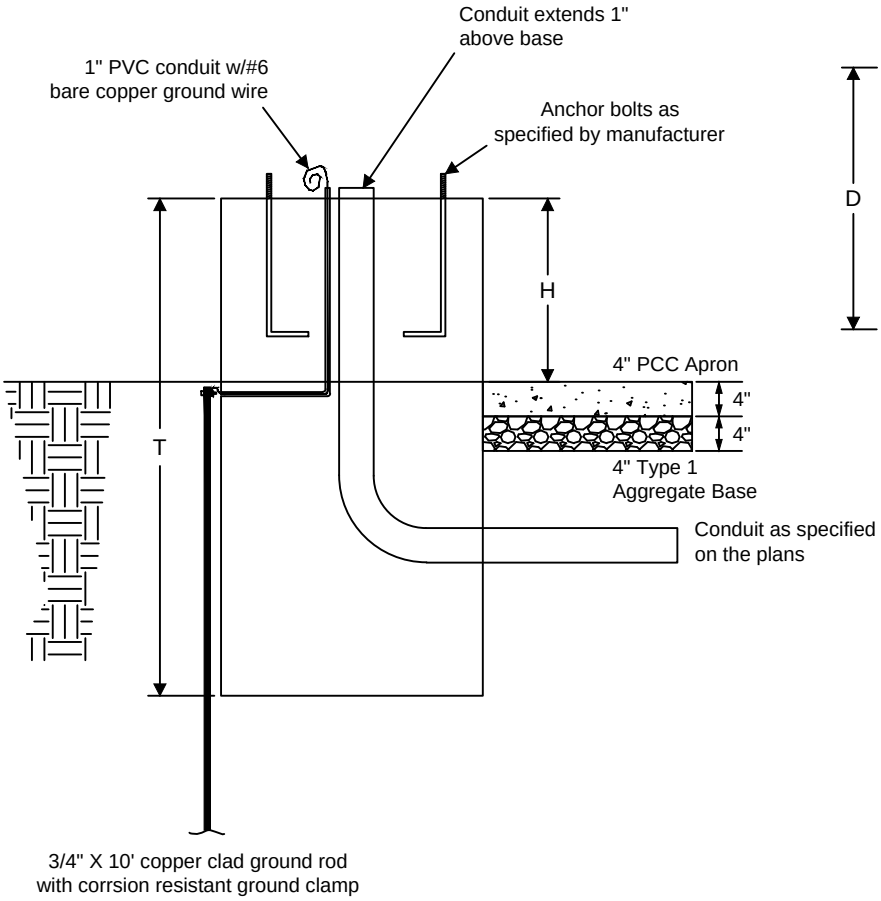

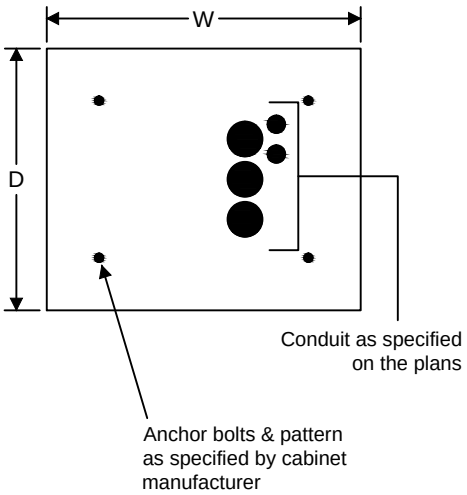

	Cubic Yards Concrete			
	B	BS	C	D
With Apron	1.83	1.70	1.65	2.57
Without Apron	1.23	1.10	1.02	1.83

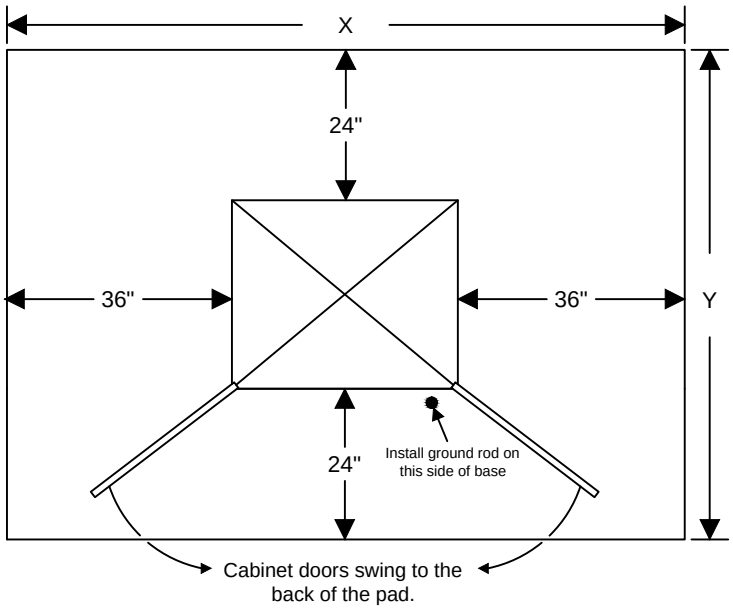

	Dimensions			
	B	BS	C	D
W	30"	30"	36"	54"
D	30"	30"	30"	36"
H	28"	21"	8"	8"
T	64"	57"	44"	44"
X	102"	102"	108"	126"
Y	78"	78"	78"	84"

NOT TO SCALE

DEPARTMENT OF PUBLIC WORKS SPRINGFIELD, MO.	**CONTROLLER BASES**	ADOPTED: TS-15

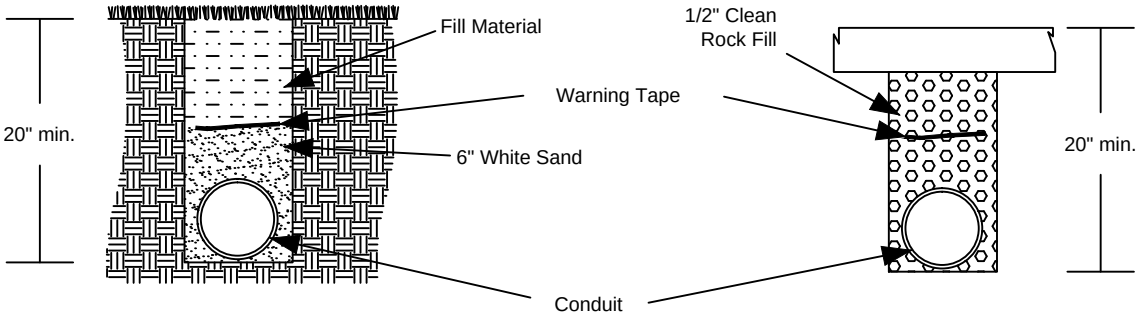

NON-PAVED SURFACE

PAVED SURFACE

NOTES:

1. All conduit in trench, except interconnect conduit, shall be Schedule 40 PVC, unless otherwise specified.

2. Interconnect conduit shall be continuous Schedule 40 Heavy Duty Polyethylene, orange in color.

3. Trench shall be a minimum of 20" deep and shall be free of rocks and debris.

4. The conduit shall be covered with 6" of white sand if under non-paved surface and 1/2" clean rock fill if under paved surface..

5. Interconnect conduit shall be marked with an orange marking tape provided by the City.

6. The trench shall then be backfilled with material free of large rocks, broken concrete, and other debris.

7. A green jacketed #14 stranded copper trace wire shall be installed in all interconnect conduit.

8. Do not ground trace wire nor extend into controller cabinets.

9. No splices will be allowed in HDPE conduit.

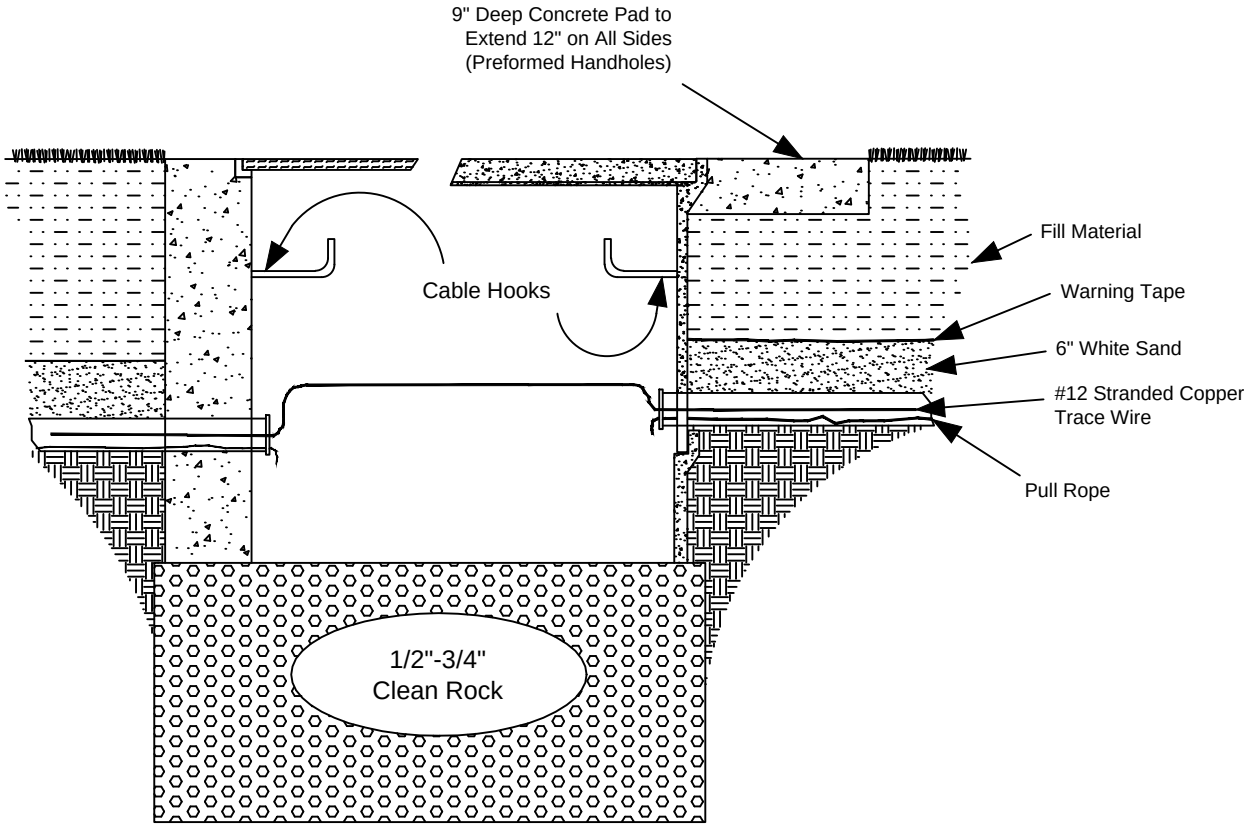

NOT TO SCALE

DEPARTMENT OF PUBLIC WORKS SPRINGFIELD, MO.	**TRENCH AND CONDUIT DETAIL**	ADOPTED: TS-16

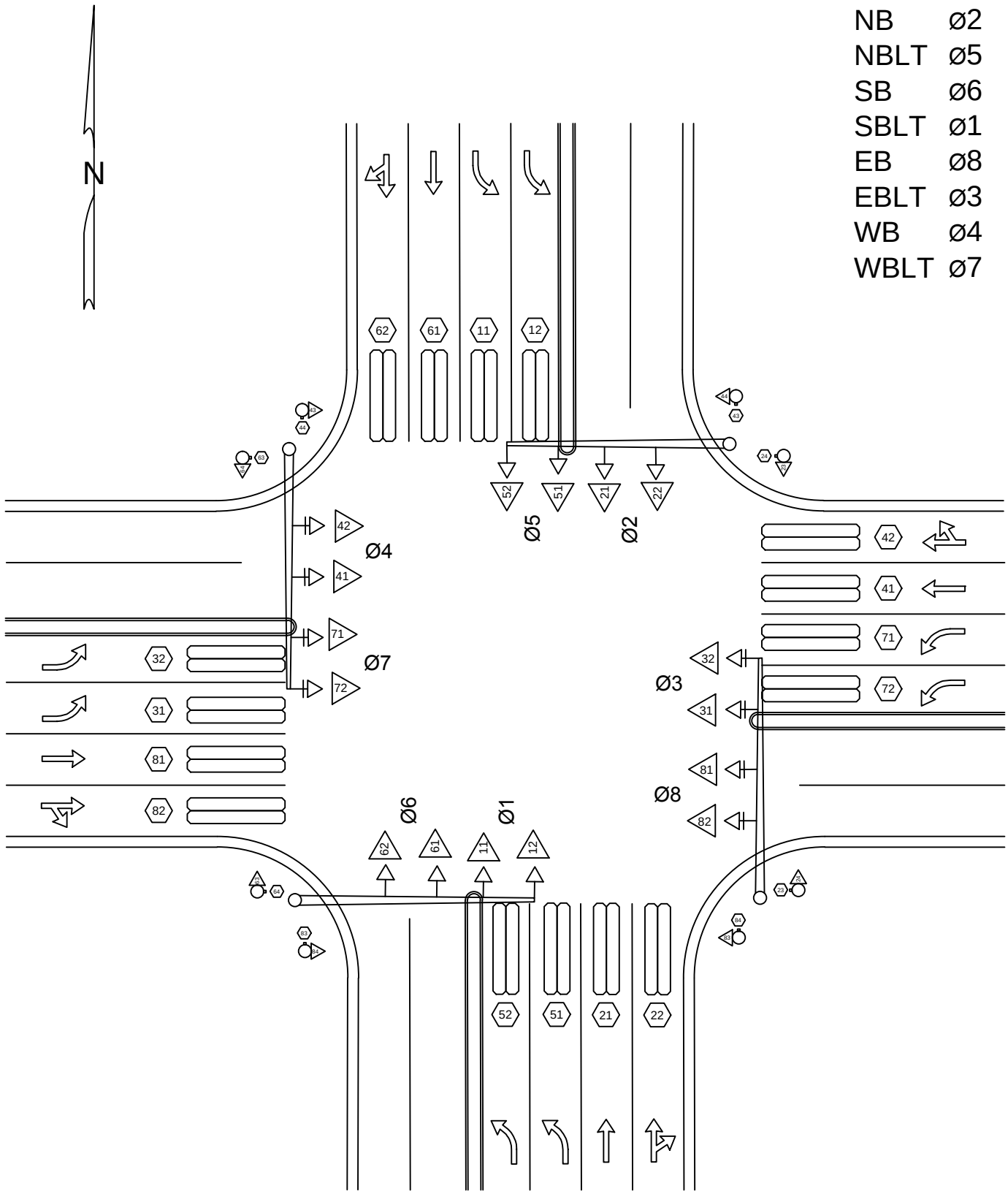

NOT TO SCALE

DEPARTMENT OF PUBLIC WORKS SPRINGFIELD, MO.	**SIGNAL PHASING LAYOUT**	ADOPTED: TS-17

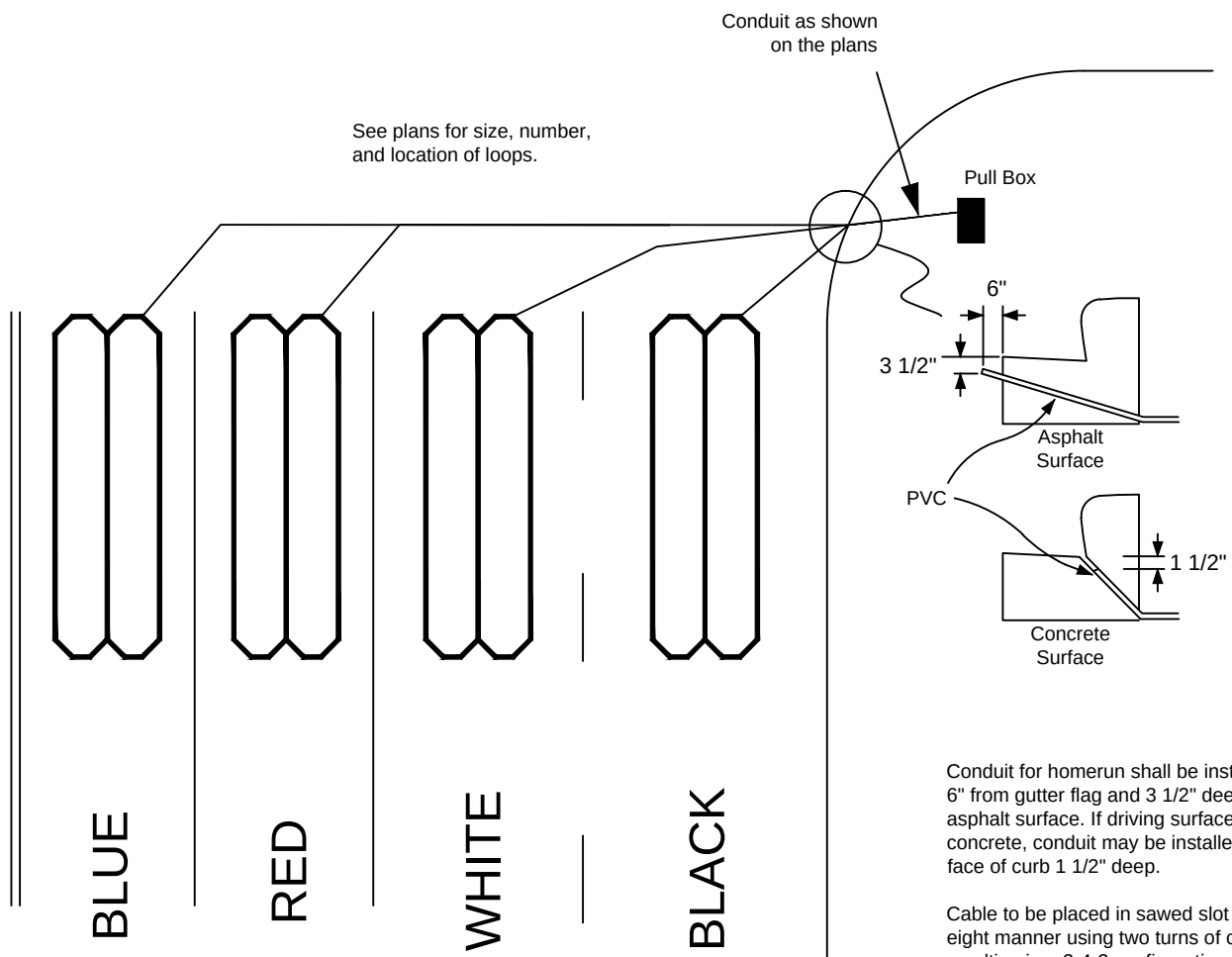

Conduit for homerun shall be installed 6" from gutter flag and 3 1/2" deep in asphalt surface. If driving surface is concrete, conduit may be installed at face of curb 1 1/2" deep.

Cable to be placed in sawed slot in a figure eight manner using two turns of cable, resulting in a 2-4-2 configuration.

Twist homerun cable 3 turns per foot.

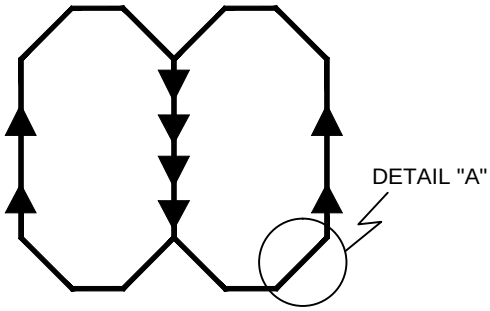

Overlap saw cuts to ensure full depth at corners.
Cut 45 degree corners as shown.

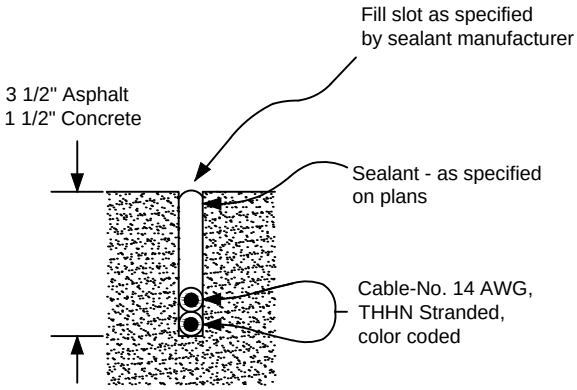

Lanes shall be designated from right to left,
with the curb lane being lane 1.
Black cable shall be used for lane 1, white for lane 2,
red for lane 3, and blue for lane 4.

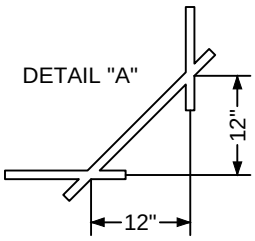

NOT TO SCALE

DEPARTMENT OF PUBLIC WORKS SPRINGFIELD, MO.	**DETECTOR LOOP INSTALLATION**	ADOPTED: TS-18

Example 1
Post at back of Sidewalk

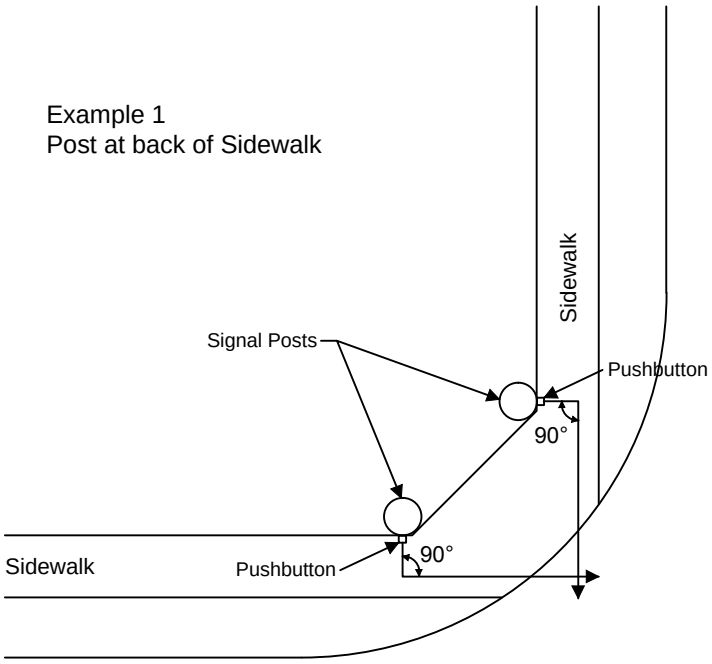

Rule of Thumb: Install the Pushbutton at 90 degree angle to the alignment of crosswalk it serves, 42" above sidewalk grade. Install on the faces adjacent to the sidewalk.

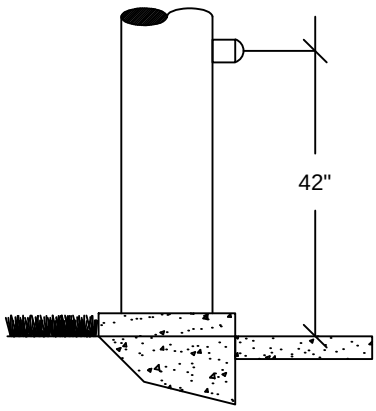

Example 2
Sidewalk back of Post

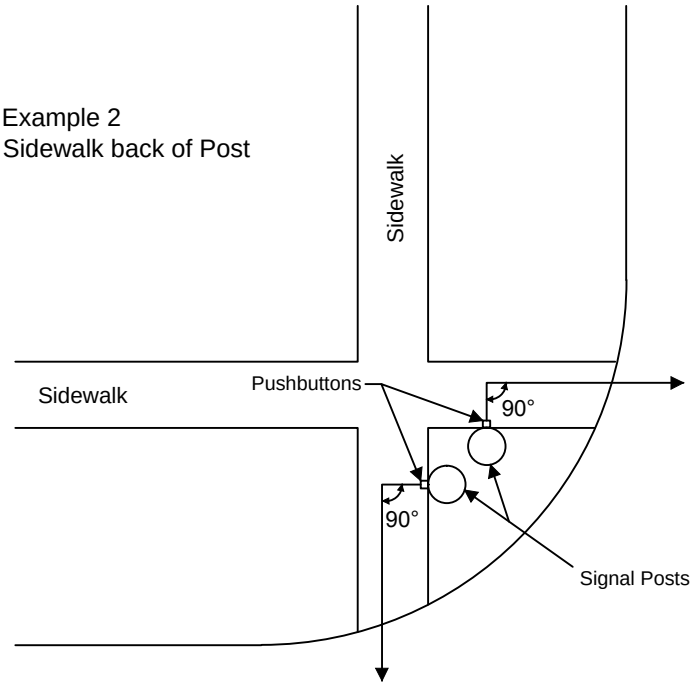

NOT TO SCALE

DEPARTMENT OF PUBLIC WORKS SPRINGFIELD, MO.	**PEDESTRIAN PUSHBUTTONS**	ADOPTED: TS-19

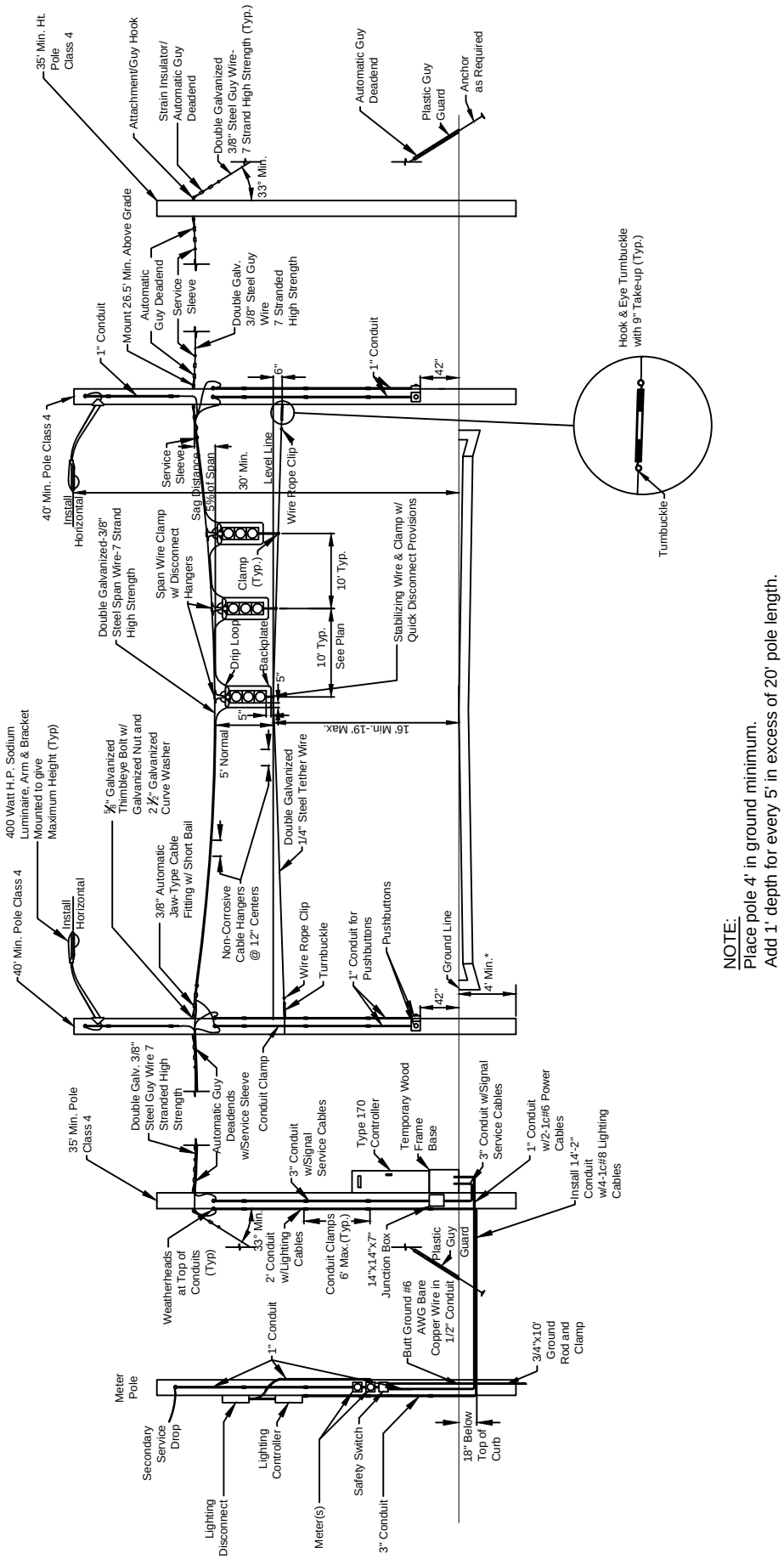

NOTE:
Place pole 4' in ground minimum.
Add 1' depth for every 5' in excess of 20' pole length.

NOT TO SCALE

DEPARTMENT OF PUBLIC WORKS SPRINGFIELD, MO.	**SPAN WIRE DETAILS WOOD POLES**	ADOPTED: TS-20