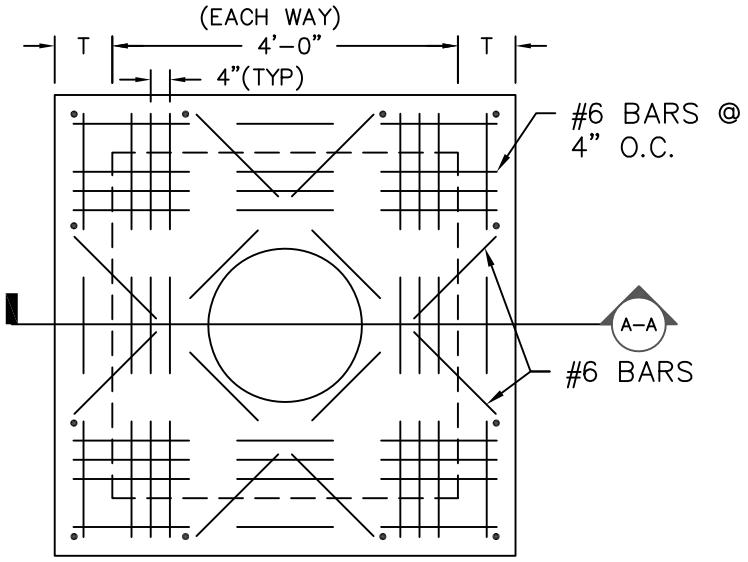

PLAN

STANDARD JUNCTION BOX			
TABLE OF REINFORCEMENT			WALL THICKNESS
"D"	VERT. BARS	HORZ. BARS	"T"
2'-0"	#4 BARS at 18" C.C.	#4 BARS at 12" C.C.	9"
3'-0"	#4 BARS at 18" C.C.	#4 BARS at 12" C.C.	9"
4'-0"	#4 BARS at 18" C.C.	#4 BARS at 12" C.C.	9"
5'-0"	12 #5 at 18" C.C. 5'-11" EACH	20 #4 at 14" C.C. 5'-2" EACH	9"
6'-0"	12 #5 at 18" C.C. 6'-11" EACH	20 #4 at 17" C.C. 5'-2" EACH	9"
7'-0"	20 #5 at 12" C.C. 7'-11" EACH	24 #4 at 16" C.C. 5'-2" EACH	9"
8'-0"	20 #5 at 12" C.C. 8'-11" EACH	28 #4 at 18" C.C. 5'-2" EACH	9"
9'-0"	20 #5 at 12" C.C. 9'-11" EACH	28 #4 at 17" C.C. 5'-2" EACH	9"

STEEL IN TOP SLAB 16 #6 5'-2" EACH
4 #6 5'-0" EACH
STEEL IN BOTTOM 14 #4 5'-2" EACH
SEE DRAWINGS FOR STEEL PLACEMENT

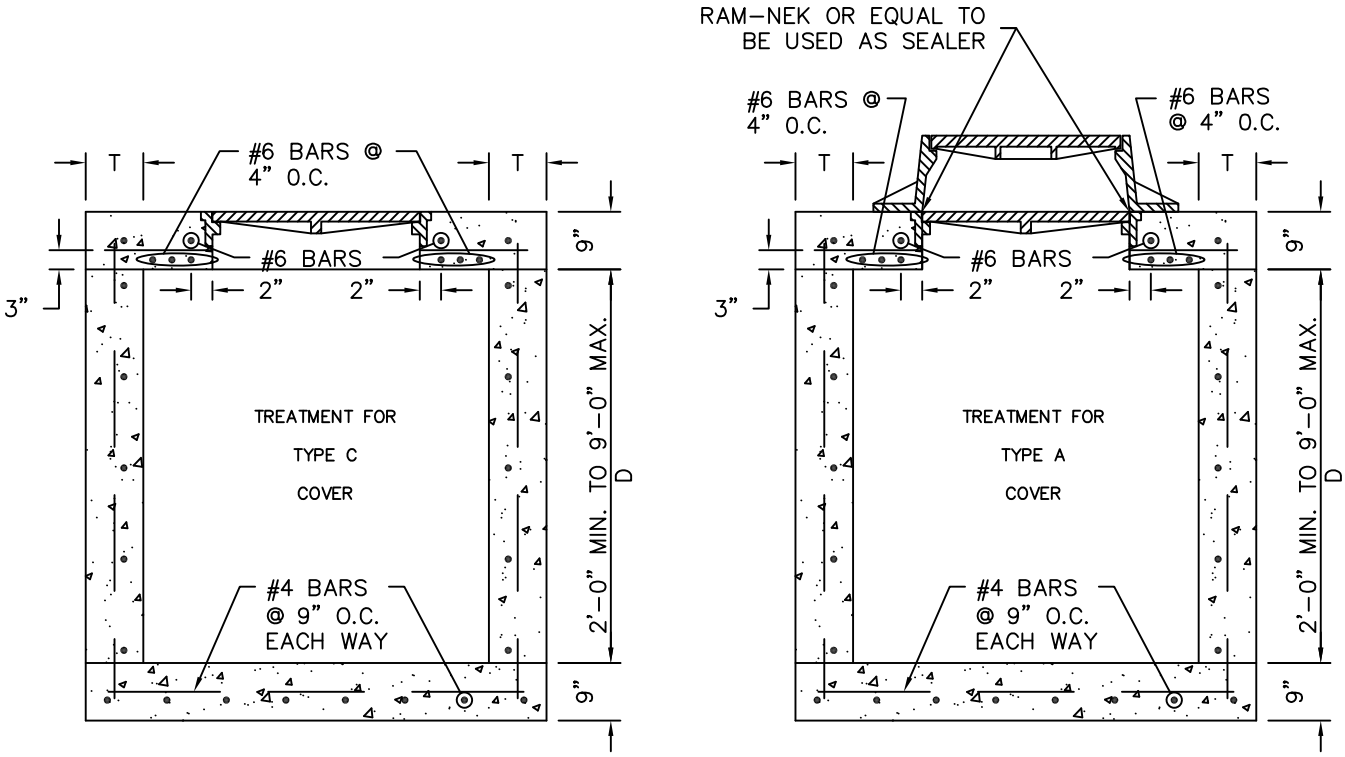

SECTION A-A

1. DIAGONAL BARS IN TOP SLAB PLACED NEAR BOTTOM OF SLAB.
2. REINFORCING BARS SHALL BE CUT OR BENT AT PIPE OPENINGS.
3. ALL PIPES SHALL FIT FLUSH WITH INSIDE FACE OF BOX.
4. MAXIMUM PIPE SIZE FOR BOX IS 42". FOR LARGER PIPES INCREASE INSIDE BOX DIMENSIONS TO THE INSIDE PIPE DIAMETER PLUS 6". USE GIVEN BAR SPACING FOR LARGER BOXES. MAXIMUM ALLOWABLE BOX SIZE IS 72".
5. BOTTOM OF BOX TO BE FILLED WITH CONCRETE TO MID-DEPTH OF PIPE FORMING CHANNELS TOWARD OUTLET PIPE FROM ALL INLET PIPES.
6. ALL CONCRETE SHALL HAVE 28 DAY COMPRESSIVE STRENGTH OF 3000 P.S.I.
7. ALL REINFORCING BARS TO BE DEFORMED BARS AND MEET REQUIREMENTS OF 1966 A.S.T.M. STANDARDS No. A-615-68 MIN. GRADE 40.
8. 4" BEDDING MATERIAL TO BE USED UNDER BOX.
9. IF BOX IS GREATER THAN 9', MUST BE SPECIAL DESIGN.
10. MUST MAINTAIN 6" CLEARANCE BETWEEN THE PIPE AND WALLS (SLAB) FOR PRECAST BOXES.

DEPARTMENT OF PUBLIC WORKS SPRINGFIELD, MO.	STANDARD JUNCTION BOX	ADOPTED:
		SS-1

PRECAST TOPS

REQUIRED DIMENSIONS

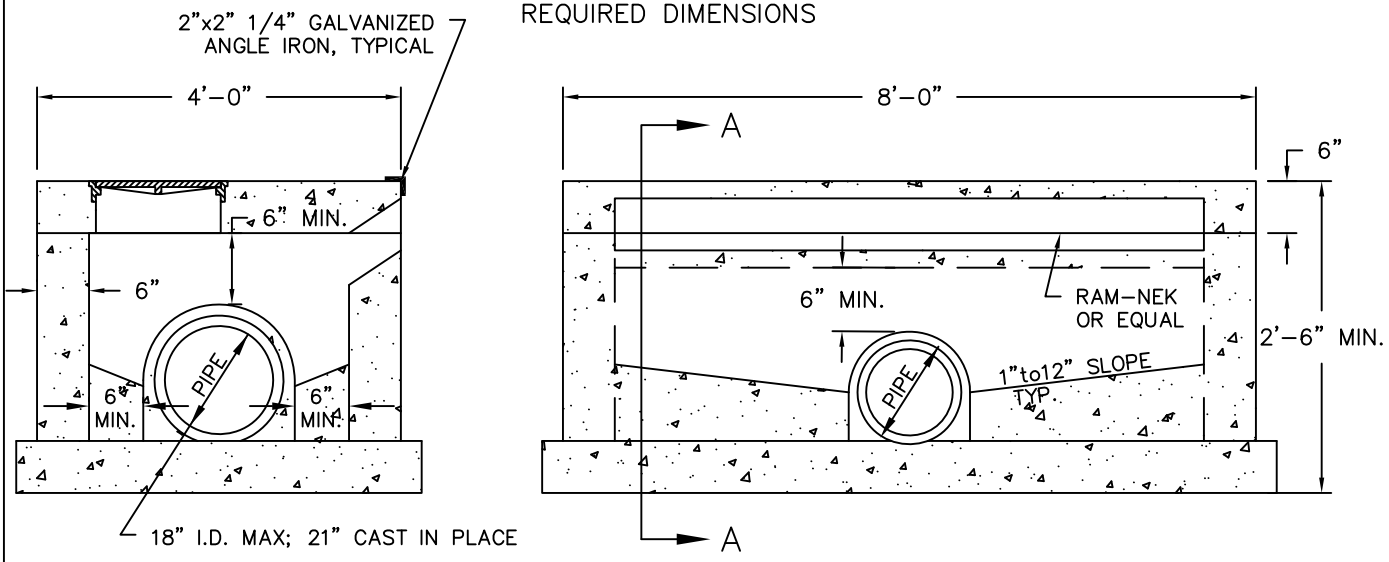

SECT. A-A

FOR 6" PRECAST TOP

NOTE: #4ø AT 10" O.C. (ALL WALLS, VERT. & HORZ.)
SEE SS-8 FOR TOP SLAB REINFORCEMENT.

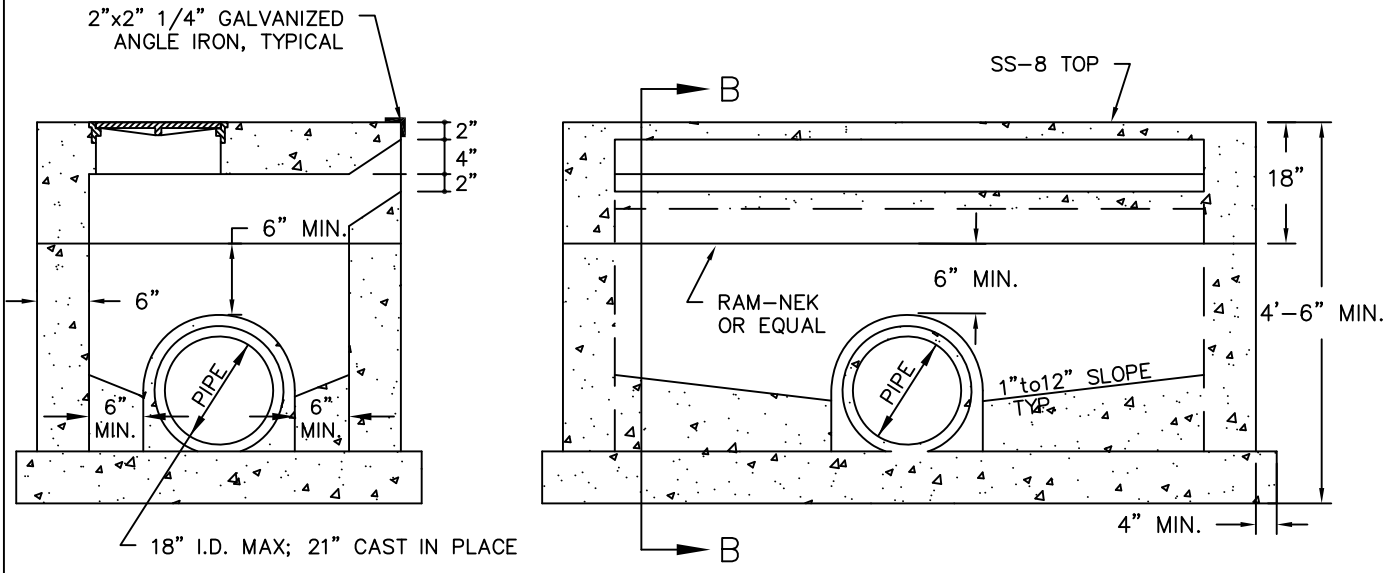

SECT. B-B

FOR SS-8 TOP (18" PRECAST TOP)

NOTES:
1. BOTTOM TO BE POURED IN PLACE
2. PIPE TO BE ON GRADE BEFORE BOTTOM IS CONSTRUCTED.
3. FOR 6" TOP, USE 4 - #4ø DOWELS: ONE IN EACH CORNER WITH RAM-NEK OR EQUAL.
4. RAM-NEK ALL JOINTS (OR EQUAL).
5. 6" INVERT REQUIRED TO PREVENT SEDIMENTATION.
6. THERE MUST BE A 6" MIN. CONCRETE SEGMENT ABOVE PRECAST OPENING.
7. IF CLEARANCE CAN'T BE PROVIDED FROM TOP AND SIDES OF PIPE, A MODIFIED INLET MUST BE USED.

DEPARTMENT OF PUBLIC WORKS SPRINGFIELD, MO.	NON-RECESSED AREA INLET	ADOPTED: 7/1/2013 SS-3

RING & COVER DETAILS

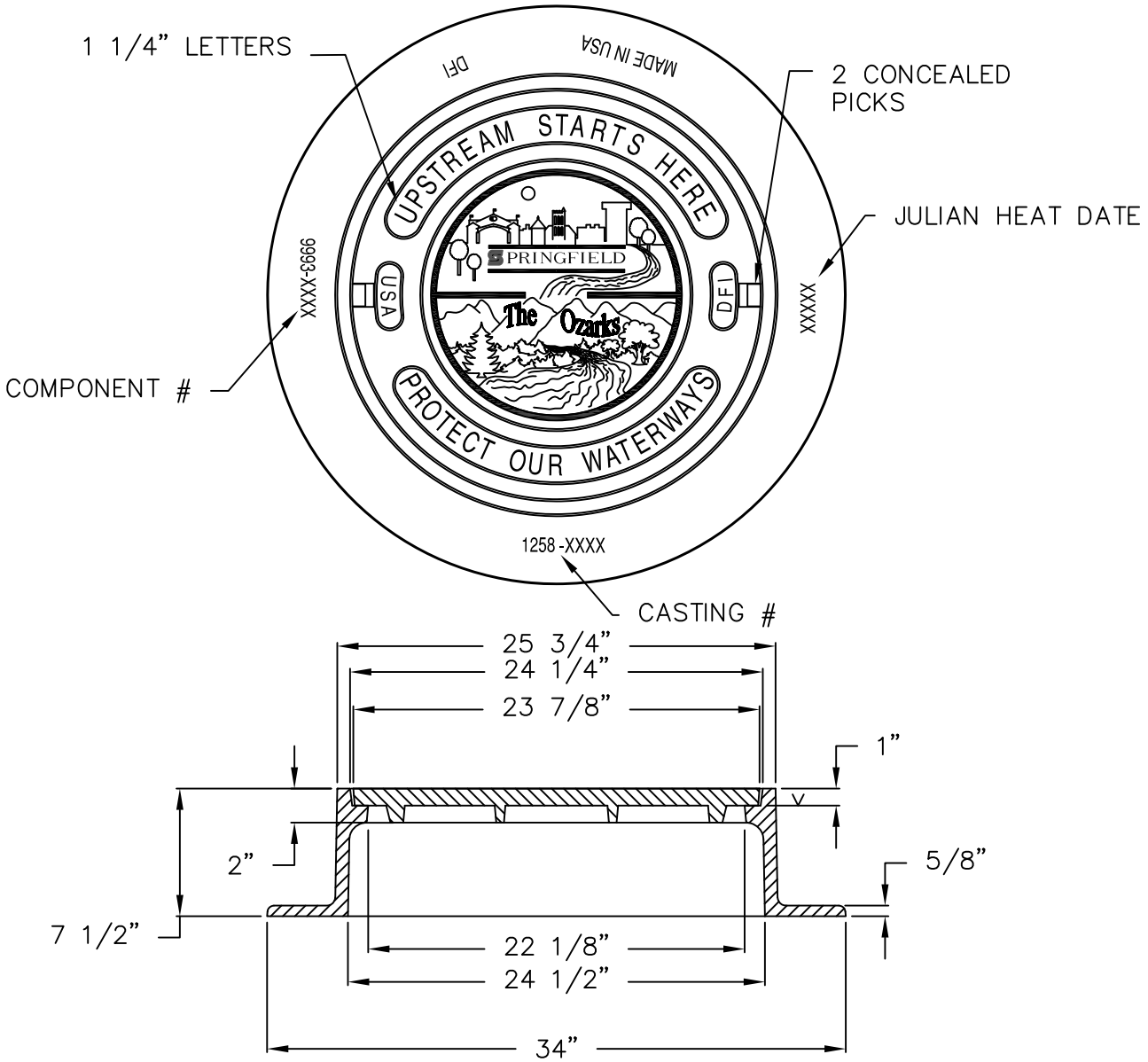

NOTE:
1. FURNISHED WITH MACHINED HORIZONTAL BEARING SURFACES.

TYPE "A" RING & COVER

DEETER # 1258 RING & COVER, EAST JORDAN IRON WORKS #2420Z RING W/2408A COVER, SS-4-C INSTALLED FLANGE DOWN OR EQUAL

DEPARTMENT OF PUBLIC WORKS SPRINGFIELD, MO.	RING & COVER FOR STORM SEWER INLET	ADOPTED: 7-1-07 SS-4-A

RING & COVER DETAILS

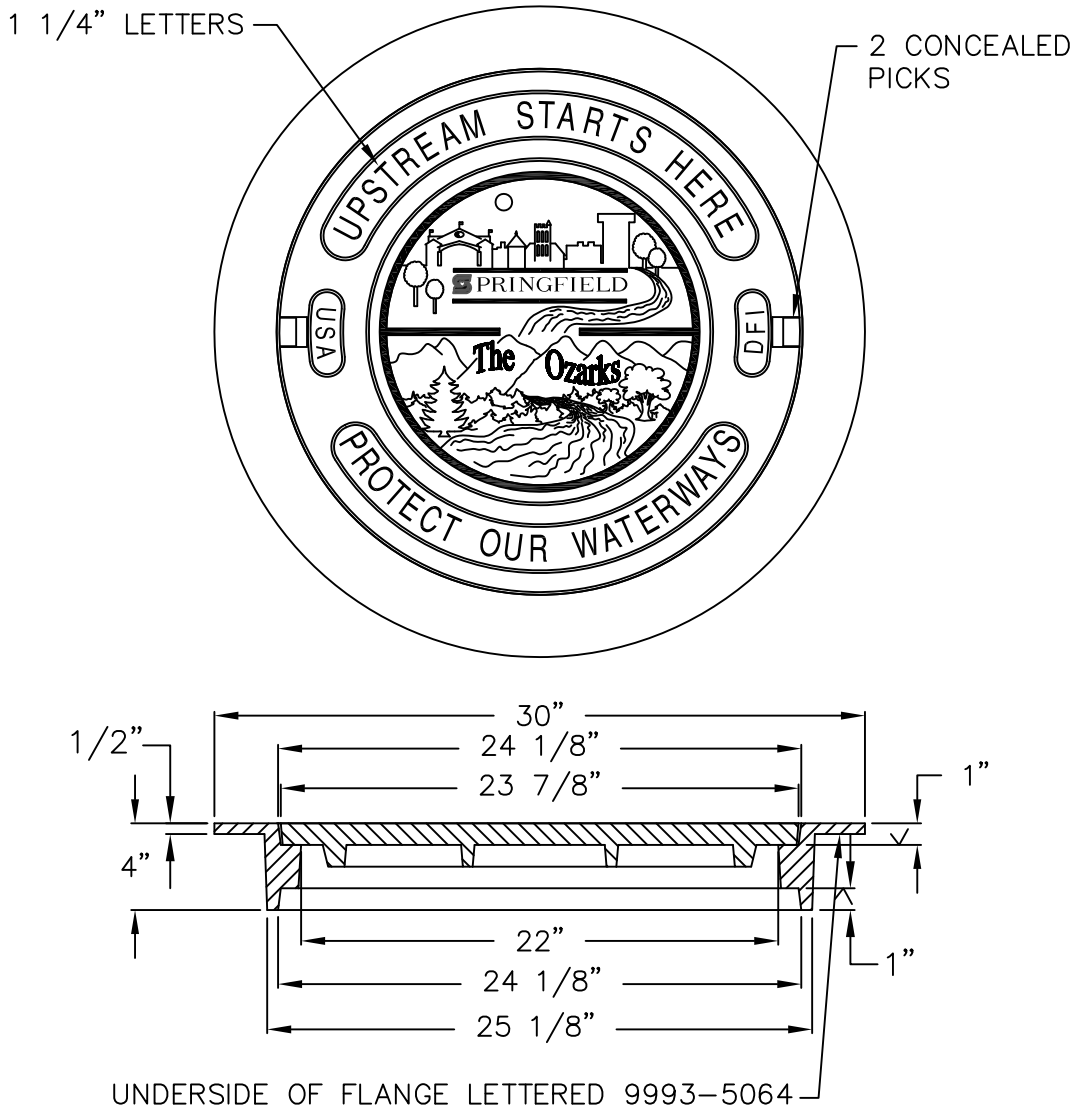

NOTE:

1. FURNISHED WITH MACHINED HORIZONTAL BEARING SURFACE.
2. RING IS REVERSIBLE AND CAN BE INSTALLED WITH FLANGE UP OR DOWN.

TYPE "C" RING & COVER FOR STORM SEWERS

DEETER # 1157 RING W/ #2018-A COVER, EAST JORDAN IRON WORKS #2425Z RING W/2408A COVER OR EQUAL

DEPARTMENT OF PUBLIC WORKS SPRINGFIELD, MO.	RING & COVER FOR STORM SEWER INLET	ADOPTED: 7-1-07 SS-4-C

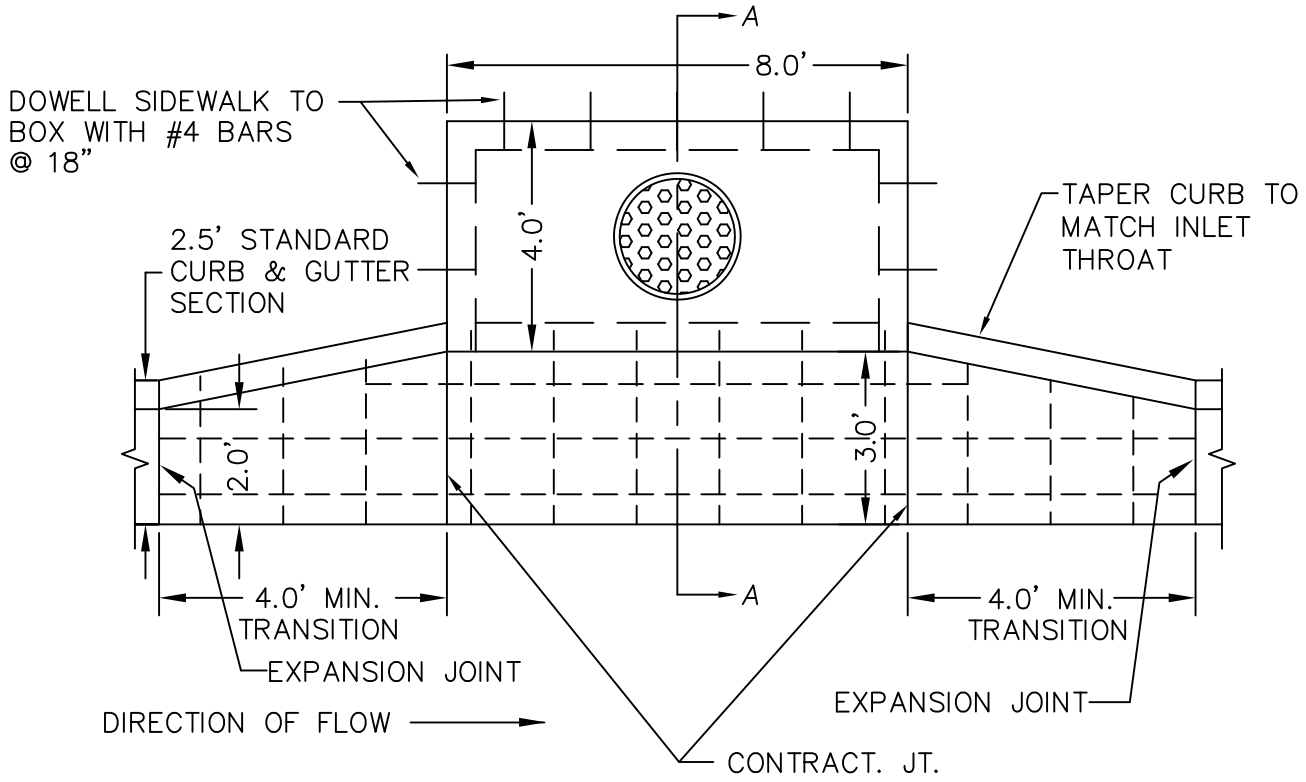

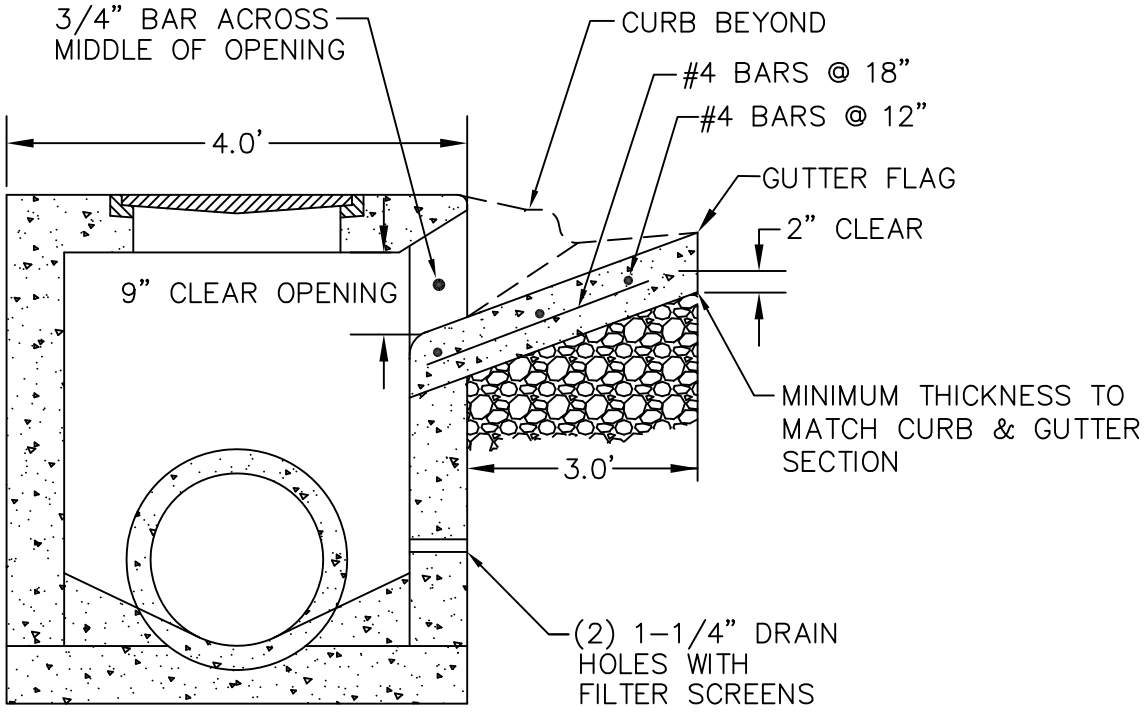

SECTION "A-A"

NOTE:

1. #4 BARS @ 10" O.C.(ALL WALLS, VERT. & HORIZ.)
2. IF CLEARANCE CAN'T BE PROVIDED FROM TOP AND SIDES OF PIPE, A MODIFIED INLET MUST BE USED.
3. 6", 12" OR 18" PRECAST LIDS MAY BE USED.
4. IF INLET IS NOT RECESSED, THROAT OPENING IS 7 INCHES.

DEPARTMENT OF PUBLIC WORKS SPRINGFIELD, MO.	CURB INLET	ADOPTED: 10-1-04
		SS-6

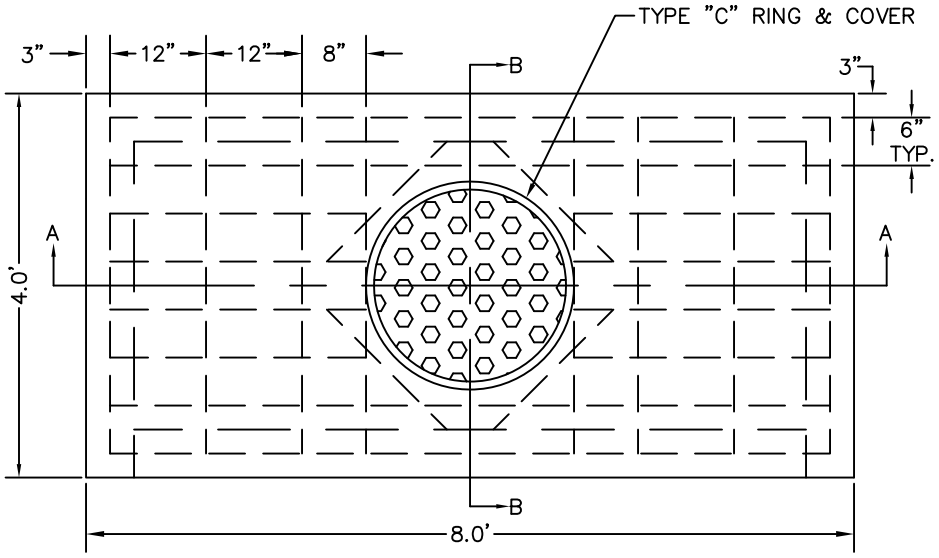

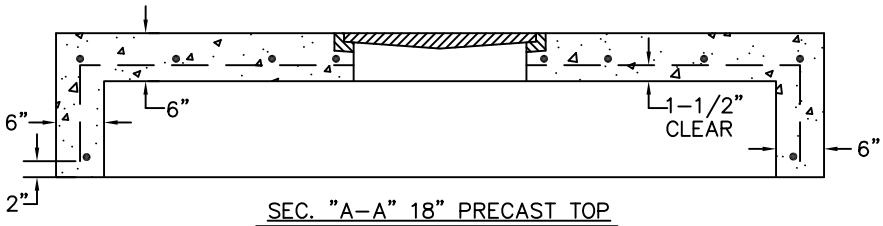

SEC. "A-A" 18" PRECAST TOP

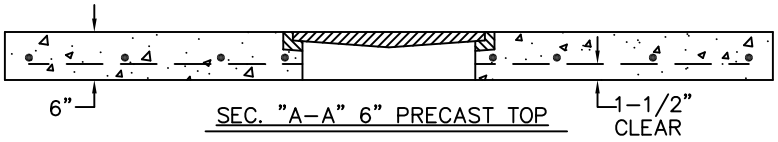

SEC. "A-A" 6" PRECAST TOP

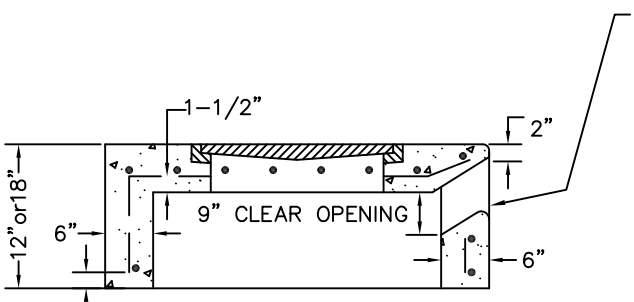

SEC. "B-B" 18" PRECAST TOP

NOTES:

1. REINFORCEMENT IS THE SAME IN THE TOP SLAB OF THE 6" AND THE 18" PRECAST TOP.

2. USE NO. 4 BAR THROUGHOUT.

3. 6" & 12" PRECAST TOPS TO BE PINNED AT 4 CORNERS.

4. IF INLET IS NOT RECESSED THAN A PROTECTIVE 2" x 2" x 1/4" GALVANIZED ANGLE IRON IS REQUIRED AS SHOWN.

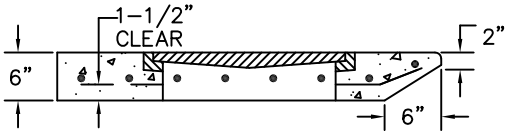

SEC. "B-B" 6" PRECAST TOP

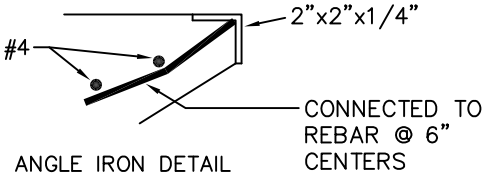

ANGLE IRON DETAIL

DEPARTMENT OF PUBLIC WORKS SPRINGFIELD, MO.	PRECAST INLET TOPS	ADOPTED: 10-1-04 SS-8

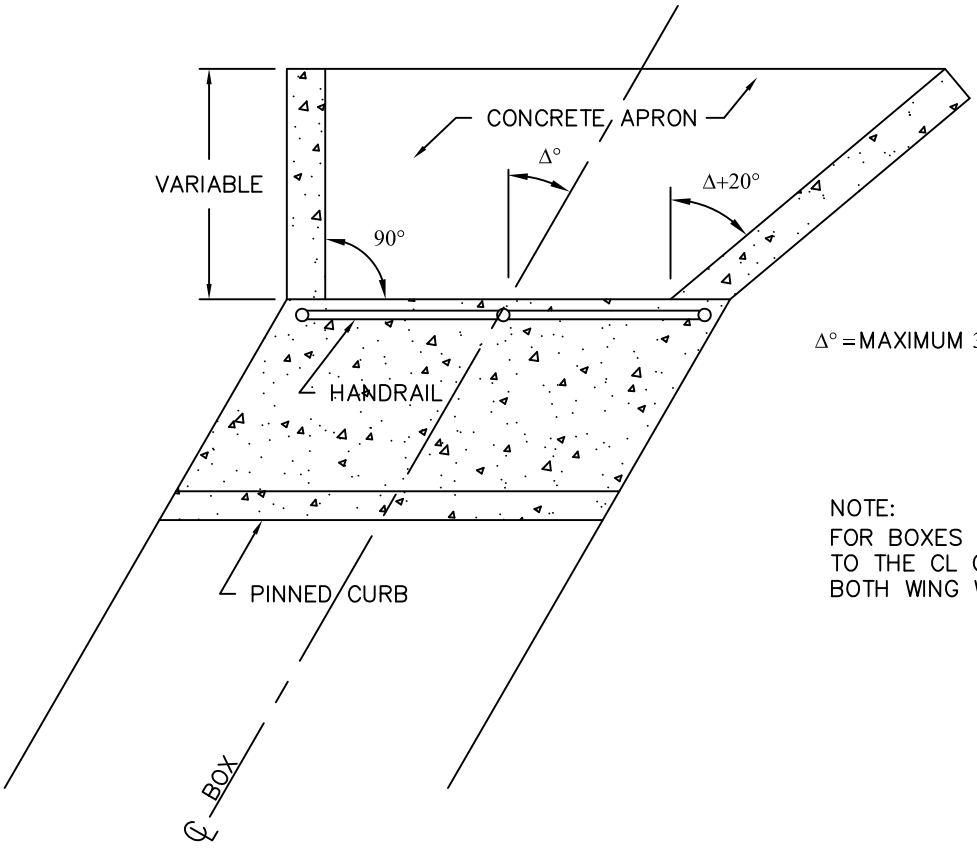

Δ° = MAXIMUM 30°

NOTE:
FOR BOXES AT RIGHT ANGLES TO THE CL OF STREET, FAN BOTH WING WALLS 20°

PLAN

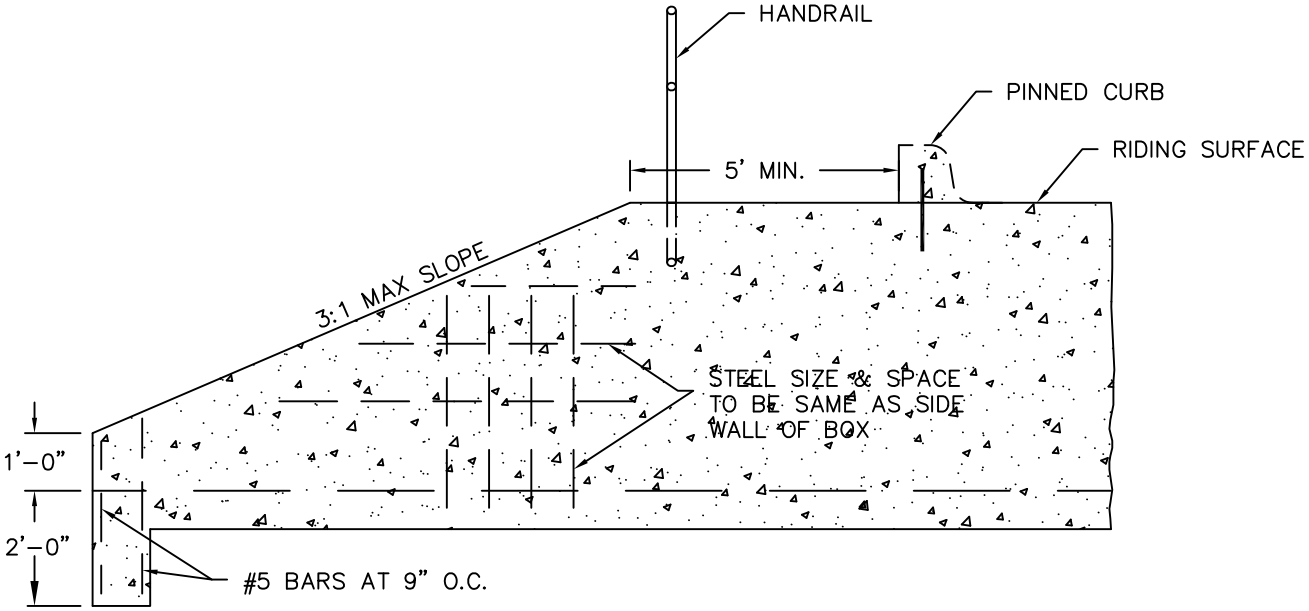

(TOE WALL REQUIRED ON BOTH ENDS OF BOX)

ELEVATION

DEPARTMENT OF PUBLIC WORKS SPRINGFIELD, MO.	CONCRETE BOX TOP RIDING SURFACE	REVISED: 7/1/2013 SS-9

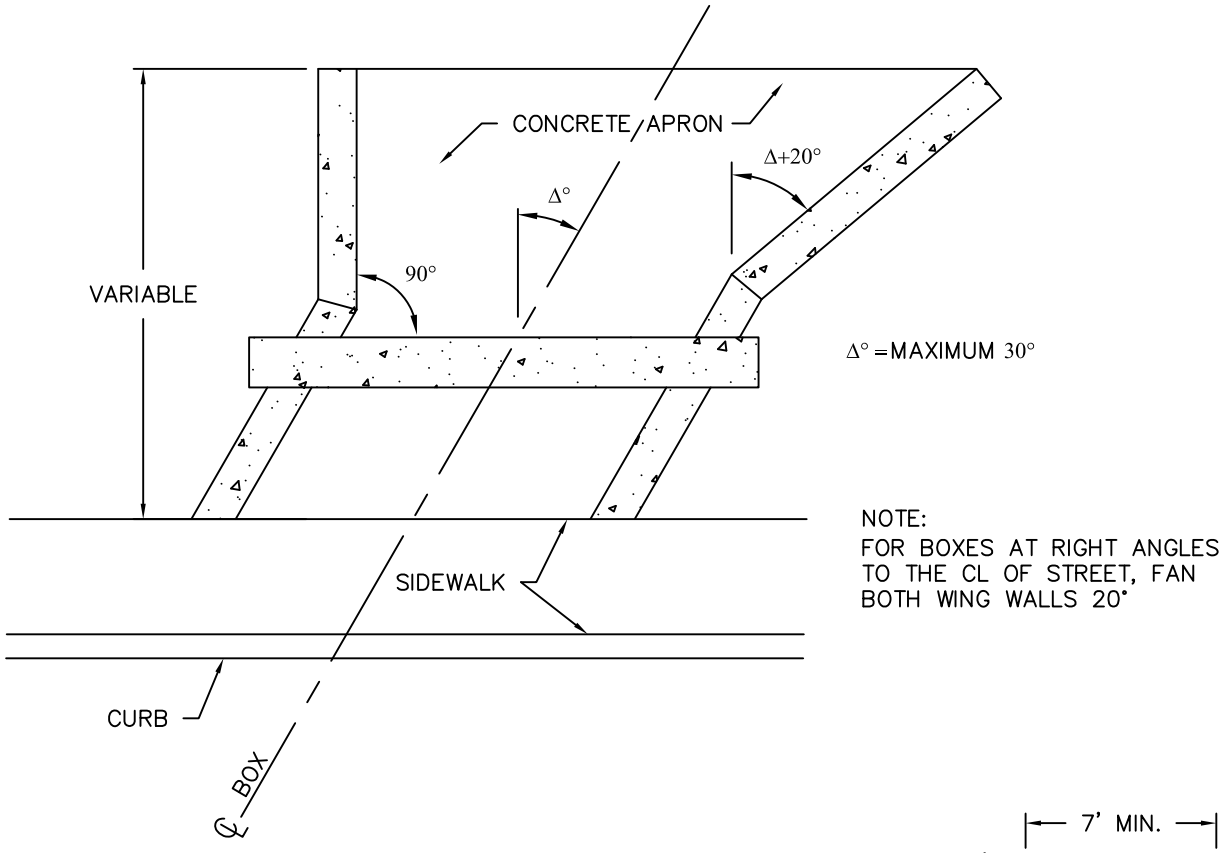

NOTE:
FOR BOXES AT RIGHT ANGLES TO THE CL OF STREET, FAN BOTH WING WALLS 20°

PLAN

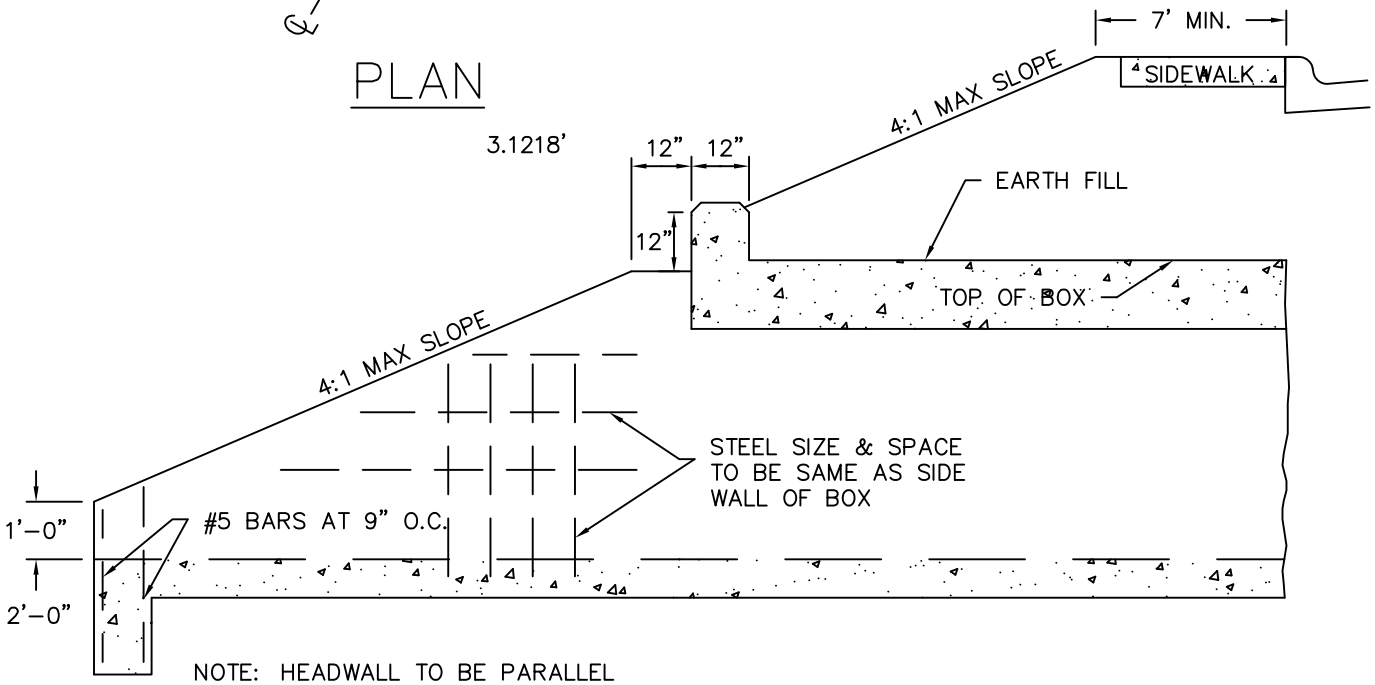

NOTE: HEADWALL TO BE PARALLEL TO CL OF ROADWAY

(TOE WALL REQUIRED ON BOTH ENDS OF BOX)

ELEVATION

DEPARTMENT OF PUBLIC WORKS SPRINGFIELD, MO.	CONCRETE BOX ROADWAY FILL	REVISED: 7/1/2013 SS-10

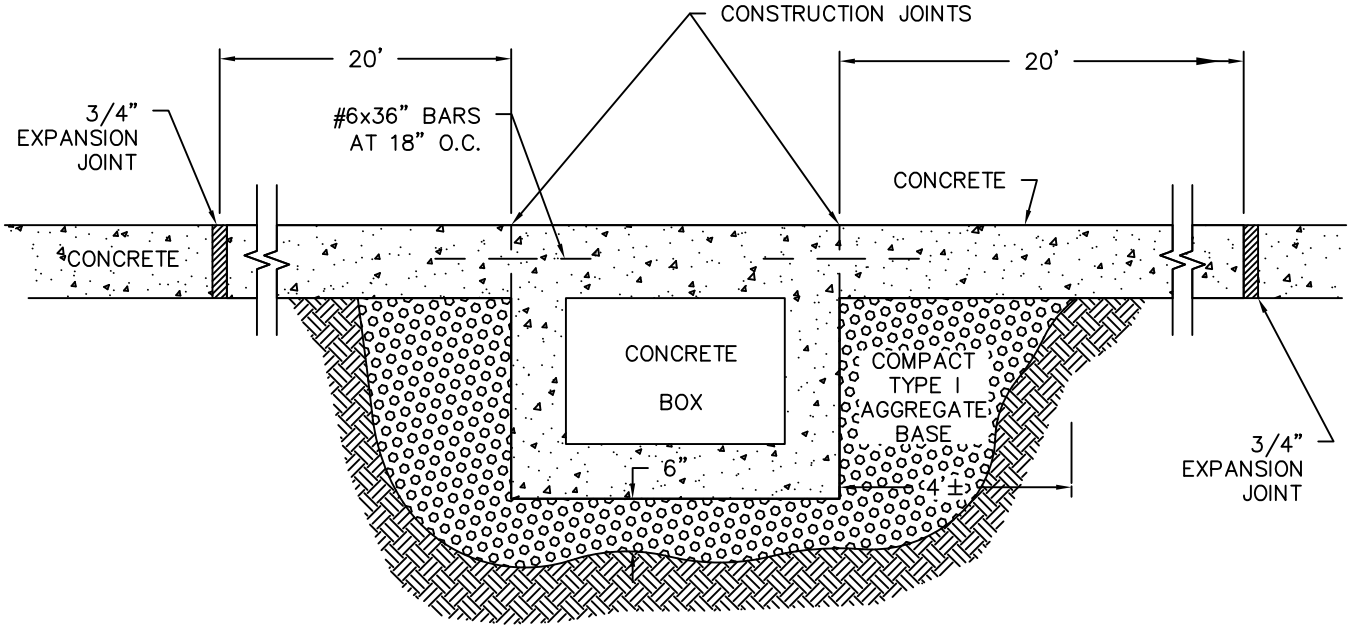

APPROACH TO CULVERT

CONCRETE PAVING

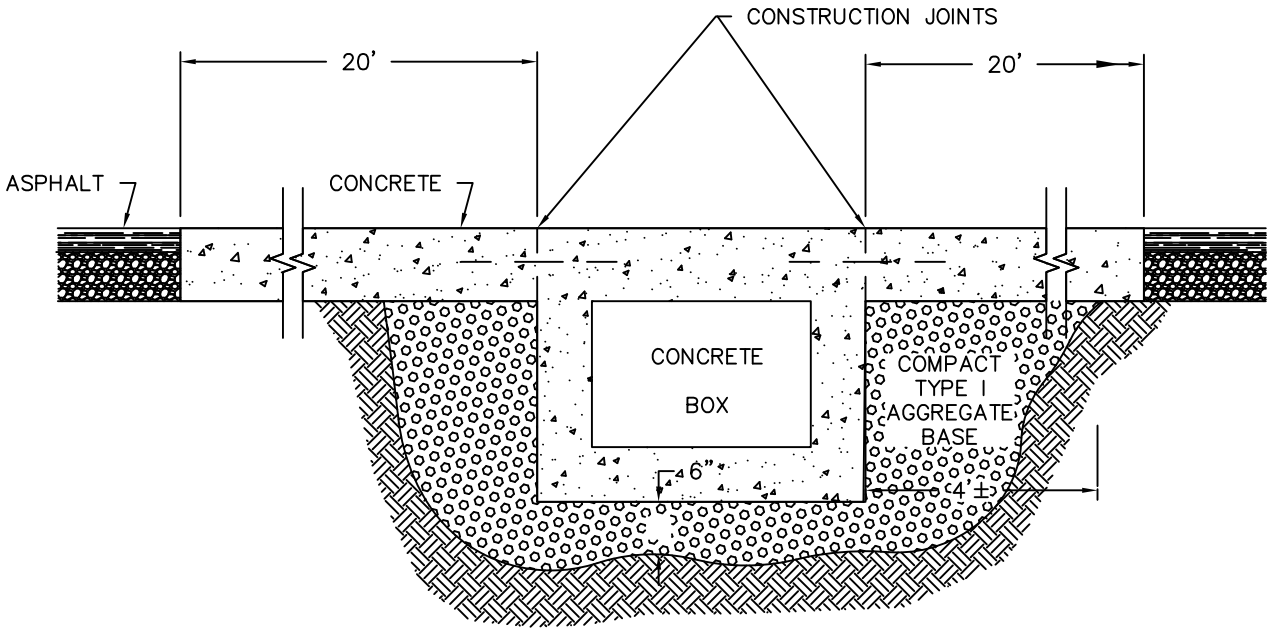

APPROACH TO CULVERT

ASPHALT PAVING

NOTE: PLACE 4' CLAY CAP ON STREET SIDE SLOPES AT EDGES OF CULVERT.

DEPARTMENT OF PUBLIC WORKS SPRINGFIELD, MO.	APPROACH TO BOX CULVERTS	ADOPTED: SS–11

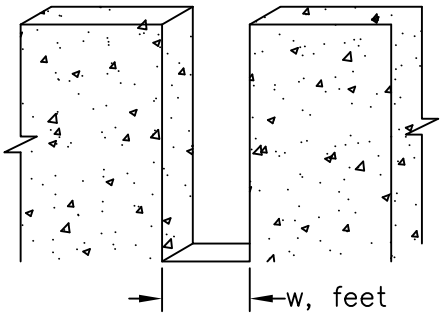

VERTICAL SLOT OUTLET

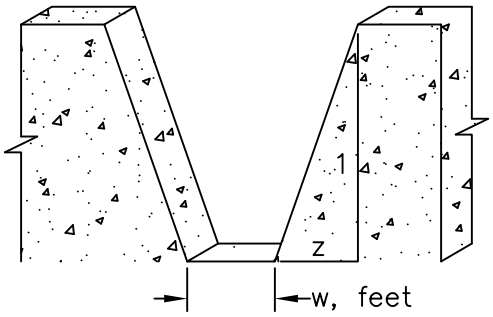

SLOPING SLOT OUTLET

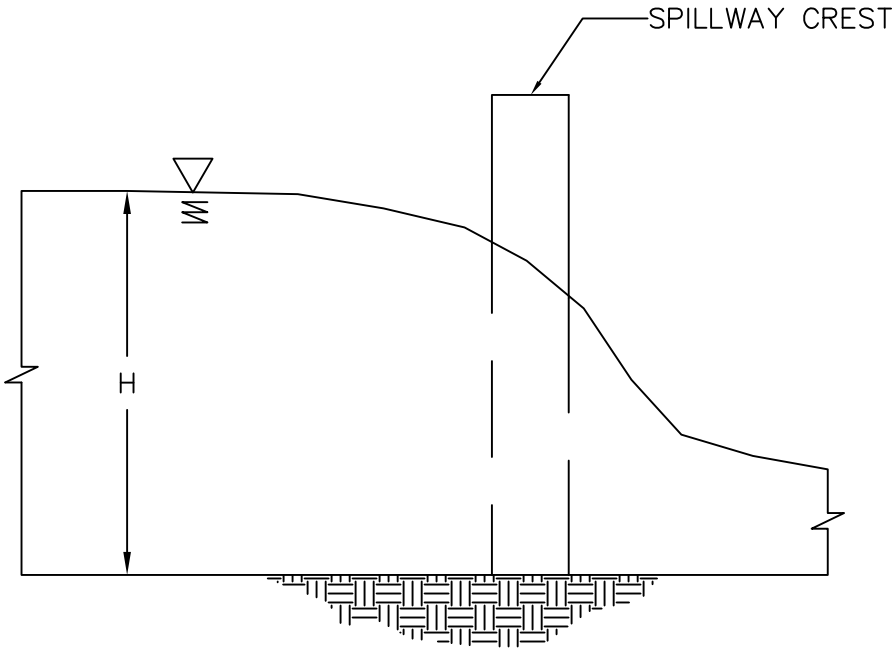

$$Q = 0.86H + (3.65w + 5.82z)H^{3/2}$$

WHERE : Q = FLOWRATE IN CUBIC FEET PER SECOND.
H = UPSTREAM HEAD (PONDED DEPTH ABOVE SLOT INVERT PLUS ANY VELOCITY HEAD) IN FEET.
HEAD IS LIMITED TO A MAXIMUM OF SIX FEET.
w = SLOT INVERT WIDTH PERPENDICULAR TO FLOW IN FEET.
MINIMUM WIDTH OF 0.333 FEET AND MAXIMUM WIDTH OF 2.0 FEET.
z = SLOPE OF SLOT SIDES EXPRESSED IN TERMS z HORIZONTAL:1 VERTICAL.
MINIMUM z = 0.0 FEET MAXIMUM z OF 0.6.

DEPARTMENT OF PUBLIC WORKS SPRINGFIELD, MO.	VERTICAL & SLOPING SLOT OUTLET CALCULATION	ADOPTED: SS-12-B

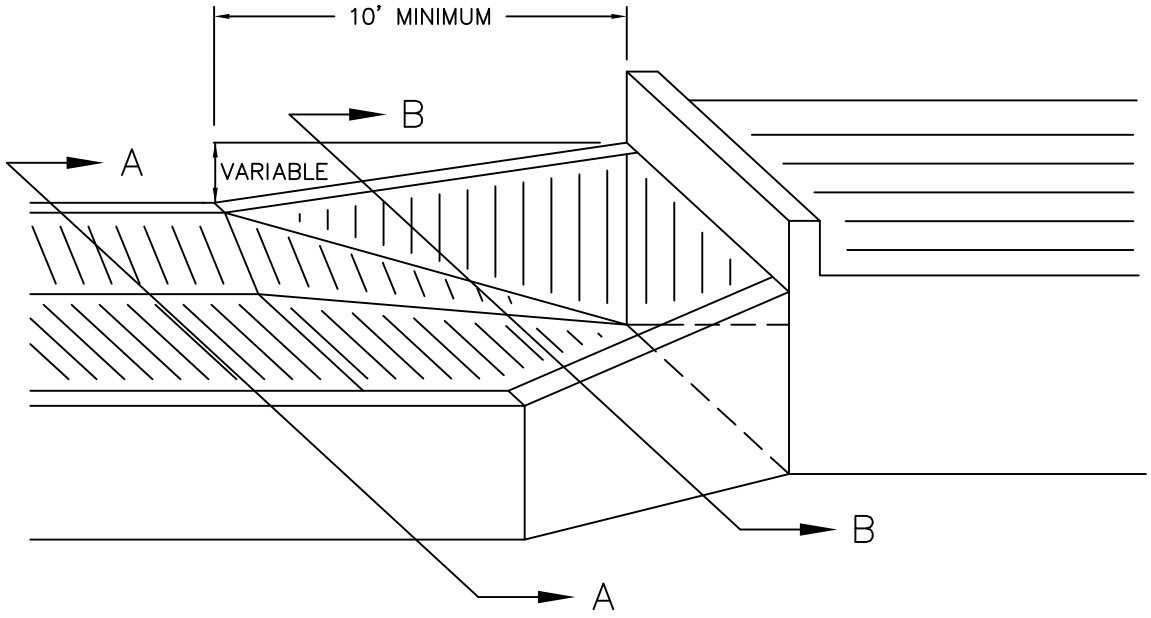

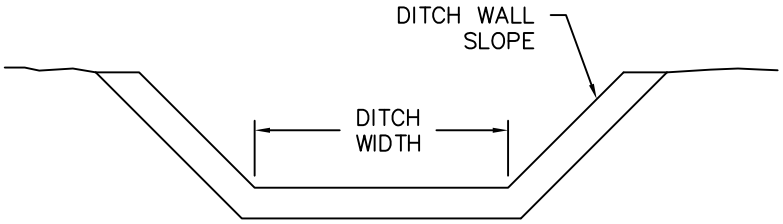

SECTION A–A

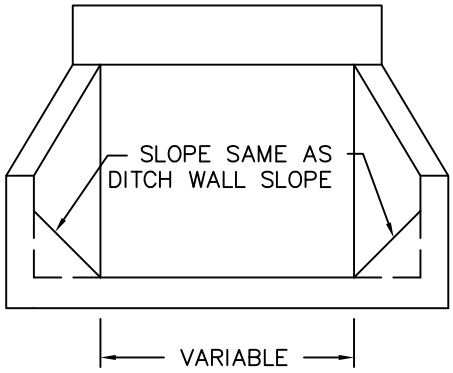

SECTION B–B

DEPARTMENT OF PUBLIC WORKS SPRINGFIELD, MO.	PAVED DITCH TRANSITIONS DETAILS	ADOPTED: SS–13

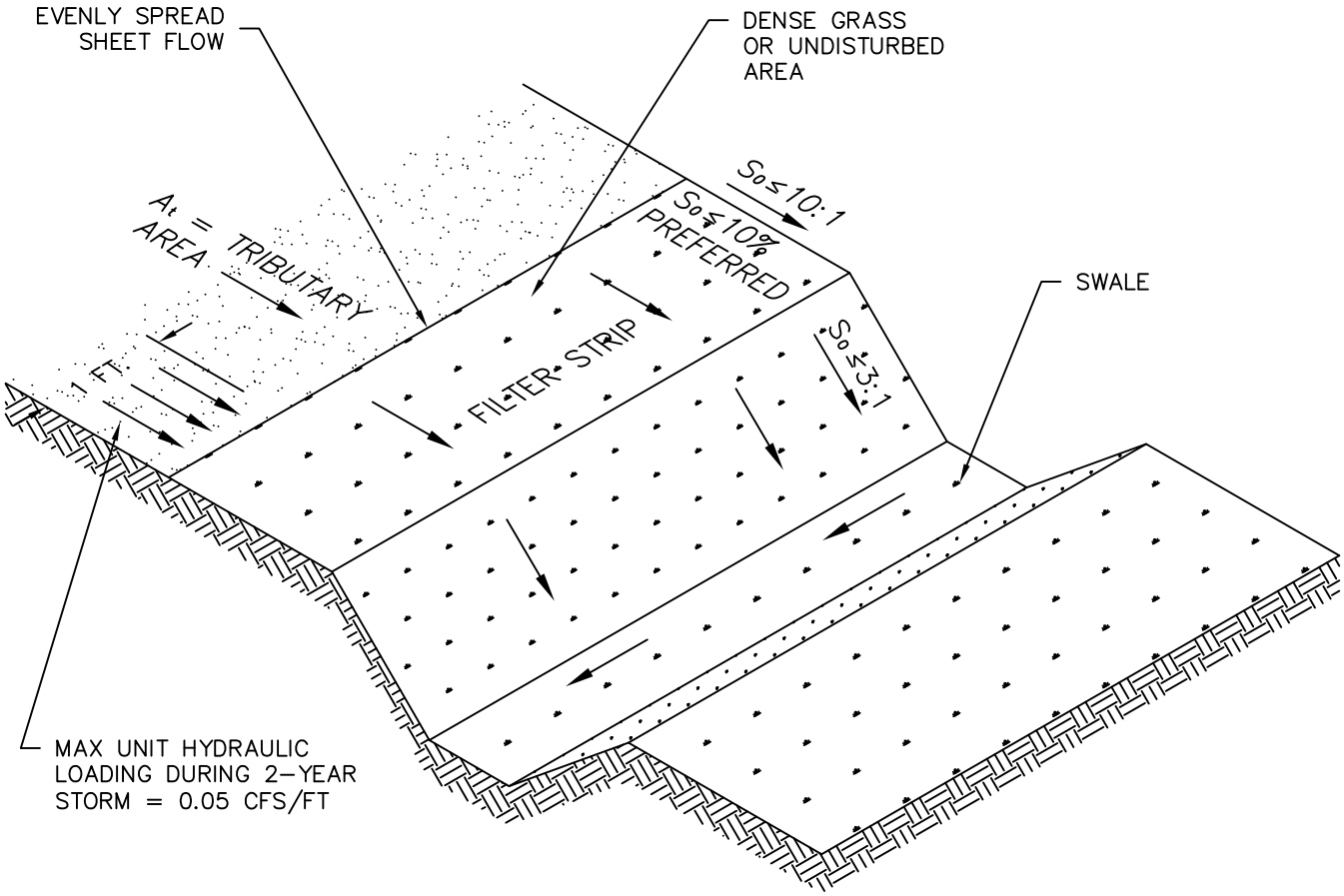

REFER TO SPRINGFIELD WATER QUALITY PROTECTION POLICY FOR FURTHER DESIGN CRITERIA

ADAPTED FROM DENVER URBAN DRAINAGE & FLOOD CONTROL DISTRICT – DRAINAGE CRITERIA MANUAL

DEPARTMENT OF PUBLIC WORKS SPRINGFIELD, MO.	VEGATATIVE FILTER STRIP WATER QUALITY BMP	REVISED: 7/1/2013 SS-14-A

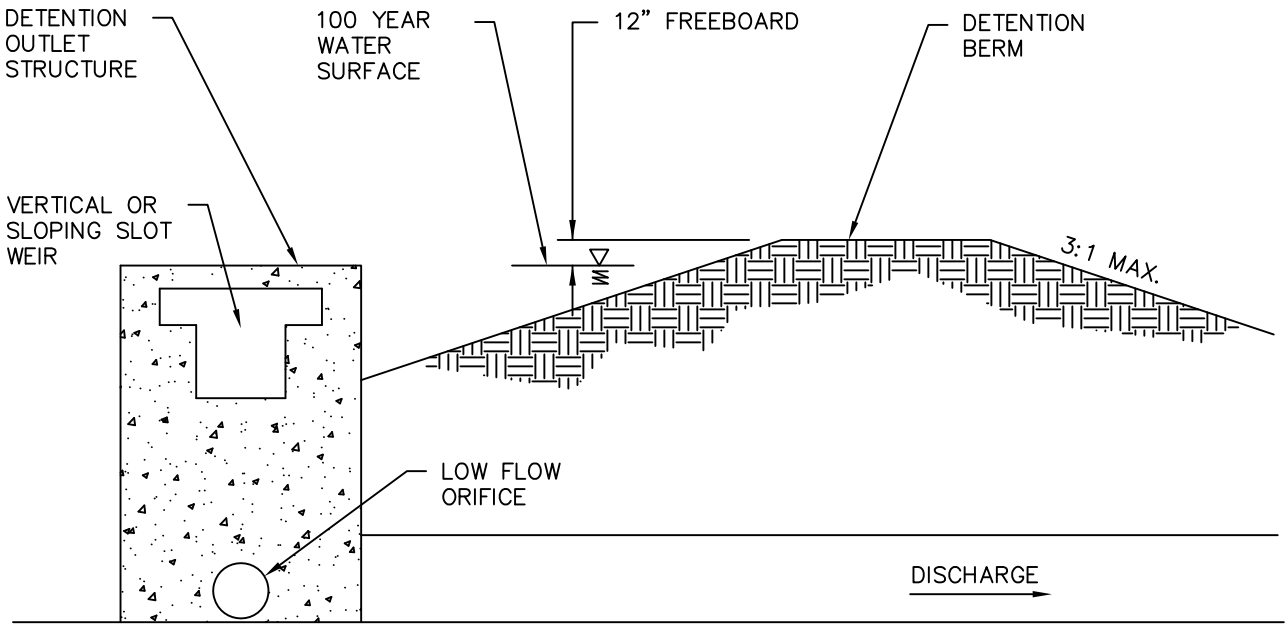

REFER TO SPRINGFIELD WATER QUALITY PROTECTION POLICY FOR FURTHER DESIGN CRITERIA

DEPARTMENT OF PUBLIC WORKS SPRINGFIELD, MO.	VERTICAL BOX DETENTION OUTLET	ADOPTED: SS-14-D

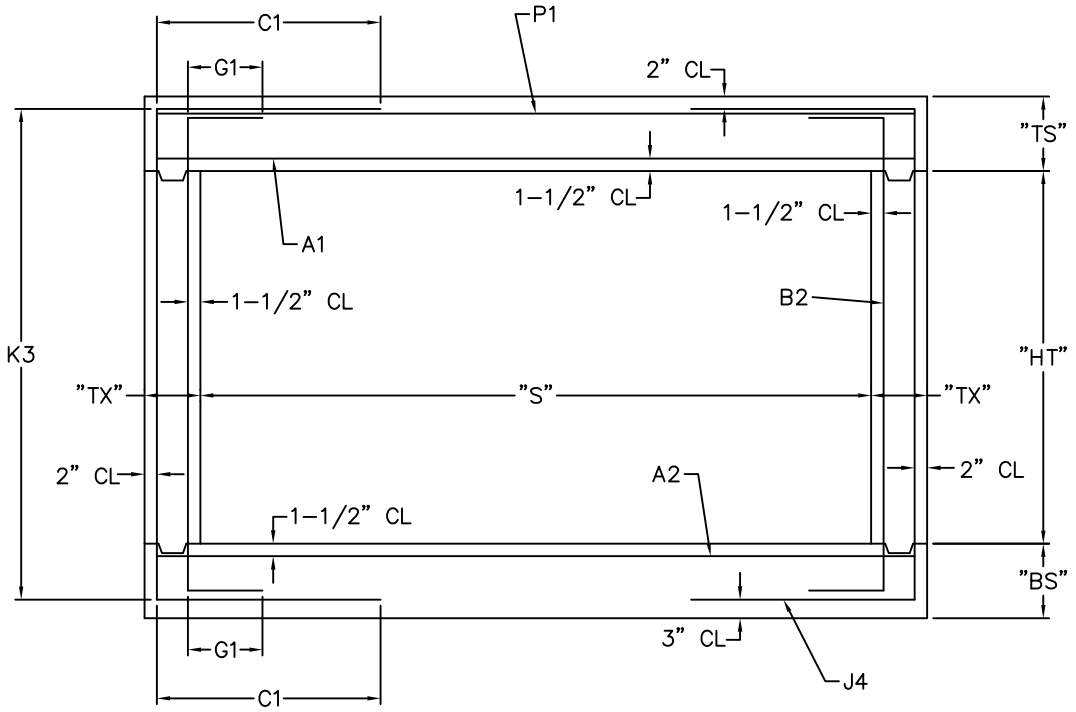

TYPICAL SECTION TO BE COMPLETED AND SHOWN ON PLANS ALONG WITH LOCATION OF F BARS.

GENERAL NOTES:

1. ALL CULVERTS SHALL BE DESIGNED FOR HS20 LOADINGS USING CONCRETE, f'c = 4,000 psi OR GREATER, REINFORCING STEEL (GRADE 60), fy = 60,000 psi
2. LAP ALL LONGITUDINAL BARS A MINIMUM OF 23" AT SPLICES
3. ALL DIMENSIONS ARE TO BE SHOWN IN INCHES.
4. MINIMUM CLEARANCE TO REINFORCING STEEL SHALL BE 1-1/2 INCHES UNLESS OTHERWISE SHOWN.
5. F BARS ARE TO BE A MINIMUM #4 WITH SPACING LABELED ON SECTION VIEW.
6. A FILTER CLOTH 3 FEET IN WIDTH AND DOUBLE THICKNESS SHALL BE APPLIED TO ALL TRANSVERSE JOINTS IN THE TOP SLAB AND SIDEWALLS. THE MATERIAL SHALL BE CENTERED ON THE JOINT AND THE EDGES SHALL BE SEALED WITH A MASTIC OR WITH TWO SIDED TAPE. THE FILTER CLOTH SHALL BE A GEOTEXTILE MEETING THE APPROVAL OF THE ENGINEER AND HAVING A GRAB TENSILE STRENGTH OF 180 LBS. (ASTM D-4632) AND AN APPARENT OF 50 TO 100 (ASTM D-4751). COST OF FURNISHING AND INSTALLING THE FILTER CLOTH WILL BE CONSIDERED COMPLETELY COVERED BY THE CONTRACT UNIT PRICE FOR OTHER ITEMS.
7. THE DESIGN SHALL SHOW AS A MINIMUM; THE DESIGN LOAD, DESIGN FILL HEIGHT, CONCRETE AND STEEL STRESS USED, AND THE FOLLOWING INFORMATION.

TABLE TO COMPLETED BY DESIGNER

BAR	SIZE	C to C	LENGTH
A1			
A2			
B2			
J4			
P1			
F			

DESIGN LOAD _____

f'c _____

fy _____

DEPARTMENT OF PUBLIC WORKS SPRINGFIELD, MO.	CONCRETE BOX CULVERT MINIMUM REINFORCMENT DETAILS	ADOPTED: 10-1-04 SS-15