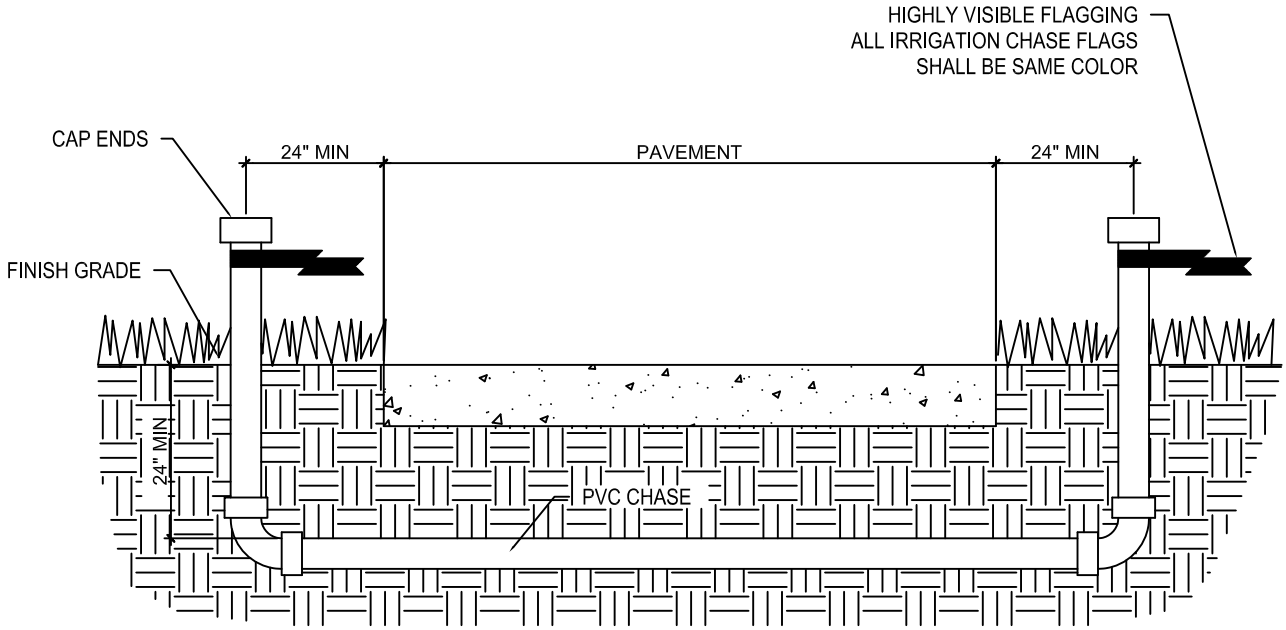

* DETAIL SHOWN IS FOR INSTALLATION OF SLEEVES PRIOR TO CONSTRUCTION OF IRRIGATION SYSTEM OR PAVEMENT.
* REFER TO IRRIGATION LAYOUT SHEETS FOR SLEEVE LOCATIONS AND SIZES.
* PLACE CONTINOUS TRACER WIRE INSIDE ALL SLEEVES
* ALL WIRE SHALL BE IN SEPERATE 2" SLEEVE
* ALL IRRIGATION PIPING SHALL BE IN SLEEVE MINIMUM OF 2" GREATER THAN SUM OUTER DIAMETER OF ALL PIPING

NOT TO SCALE

DEPARTMENT OF PUBLIC WORKS SPRINGFIELD, MO.	**TYPICAL SLEEVING DETAIL**	ADOPTED: 7/1/2013 LI - 1

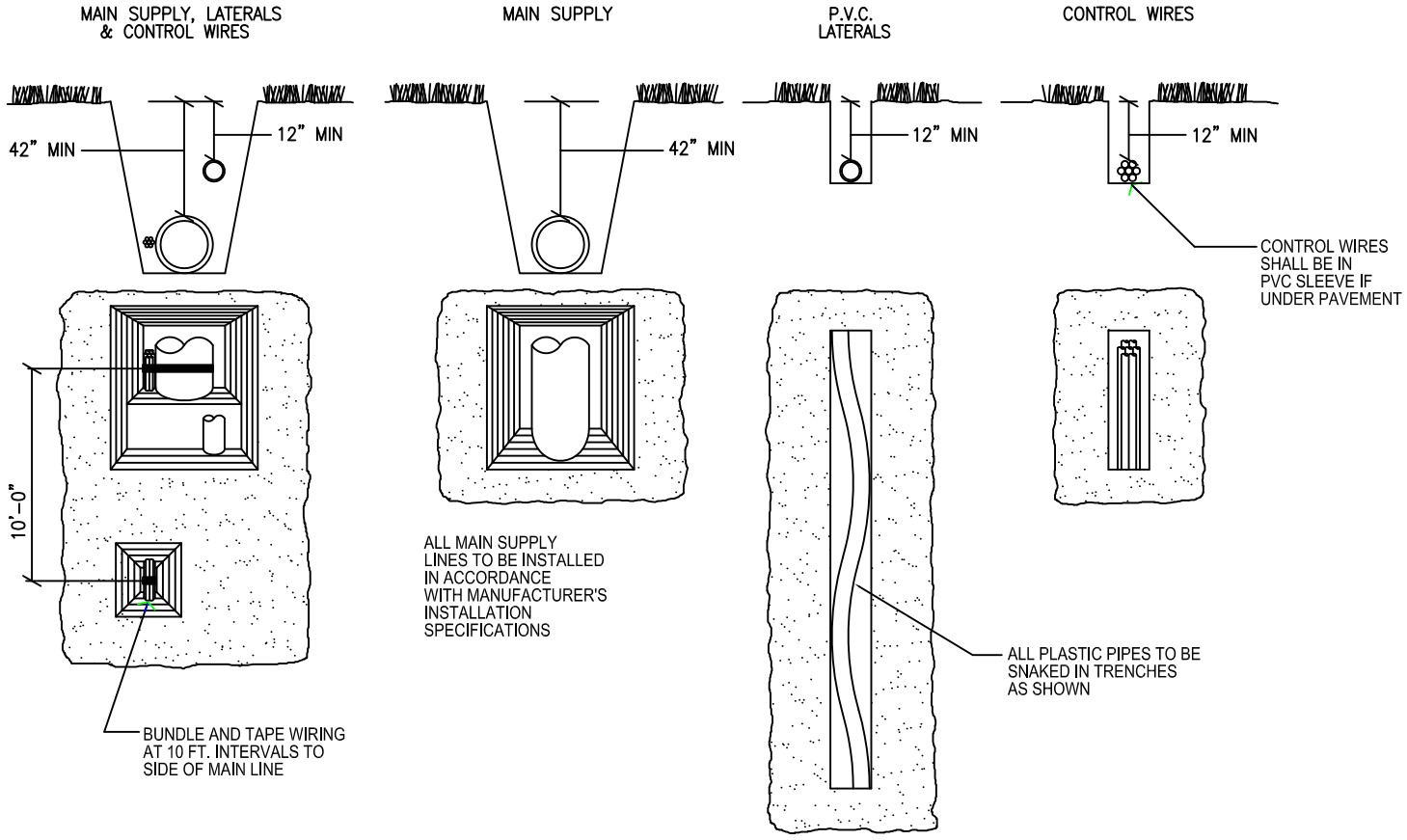

NOT TO SCALE

DEPARTMENT OF PUBLIC WORKS SPRINGFIELD, MO.	**TYPICAL TRENCHING DETAIL**	ADOPTED: 7/1/2013 LI - 2

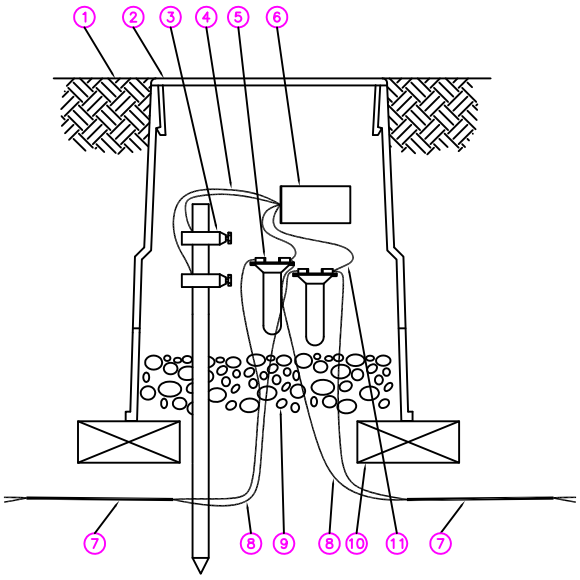

1. FINISH GRADE OR TOP OF MULCH

2. 10-INCH VALVE BOX WITH COVER:

3. RAIN BIRD VB-10RNDGROUNDING ROD: 10 OHMS OR LESS

4. GREEN/YELLOW WIRE FROM LSP-1TURFTURF TO GROUNDING ROD BRASS CLAMPS (1 OF 2)

5. DB SERIES WIRE CONNECTOR: RAIN BIRD DBTWC25 (1 OF 2)

6. LINE SURGE PROTECTOR: RAIN BIRD LSP-1TURF M10008

7. TWO-WIRE CABLE TO NEXT DEVICE (FIELD DECODER, SENSOR DECODER, LINE SURGE PROTECTOR OR ESP-LXD CONTROLLER)

8. COMMUNICATION WIRE TO NEXT DEVICE (FIELD DECODER, SENSOR DECODER, LINE SURGE PROTECTOR OR ESP-LXD CONTROLLER)

9. 3-INCH MINIMUM DEPTH OF 3/4-INCH WASHED GRAVEL

10. BRICK (1 OF 2)

11. BLUE WIRE FROM LSP-1TURF TO DB SERIES WIRE CONNECTOR

NOTES:

A. LSP-1TURF SHOULD BE INSTALLED EVERY 500-FEET OR FOR EVERY EIGHT DECODERS ON TWO-WIRE PATH.

B. LSP-1TURF TO BE INSTALLED AT END OF WIRE RUN THAT TERMINATES IN THE FIELD (STAR CONFIGURATION).

C. RAIN BIRD FD-401TURF AND FD-601TURF FIELD DECODERS COME WITH LSP-1TURF'S BUILT-IN. FD-101TURF, FD-102TURF AND FD-202TURF REQUIRE SEPARATE LSP-1TURF PROTECTION.

NOT TO SCALE

DEPARTMENT OF PUBLIC WORKS SPRINGFIELD, MO.	**SURGE PROTECTOR CONNECTION TO 2-WIRE**	ADOPTED: 7/1/2013 LI - 3

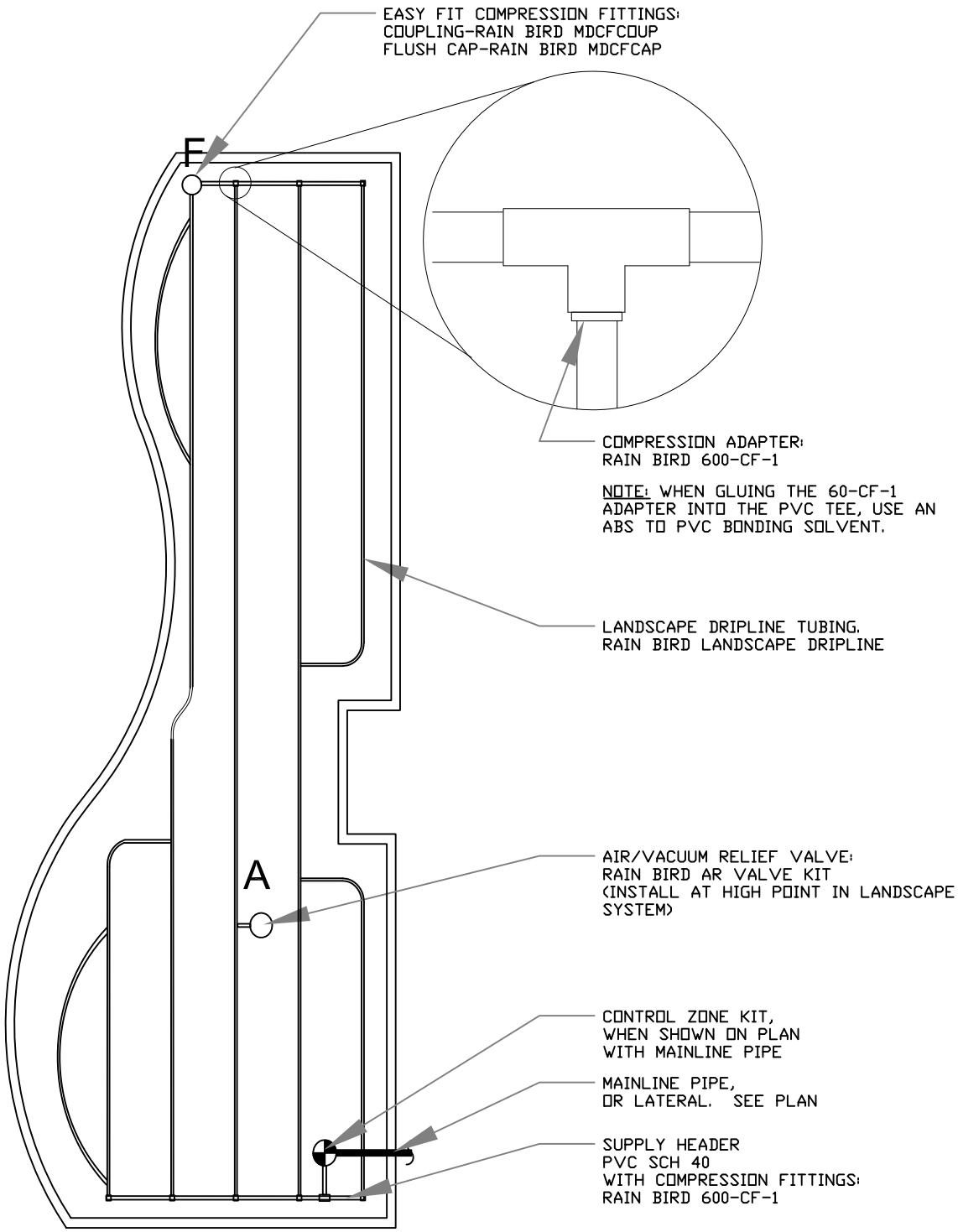

NOT TO SCALE

DEPARTMENT OF PUBLIC WORKS SPRINGFIELD, MO.	**DRIPLINE LAYOUT AT SHUB BEDS**	ADOPTED: 7/1/2013 LI - 4

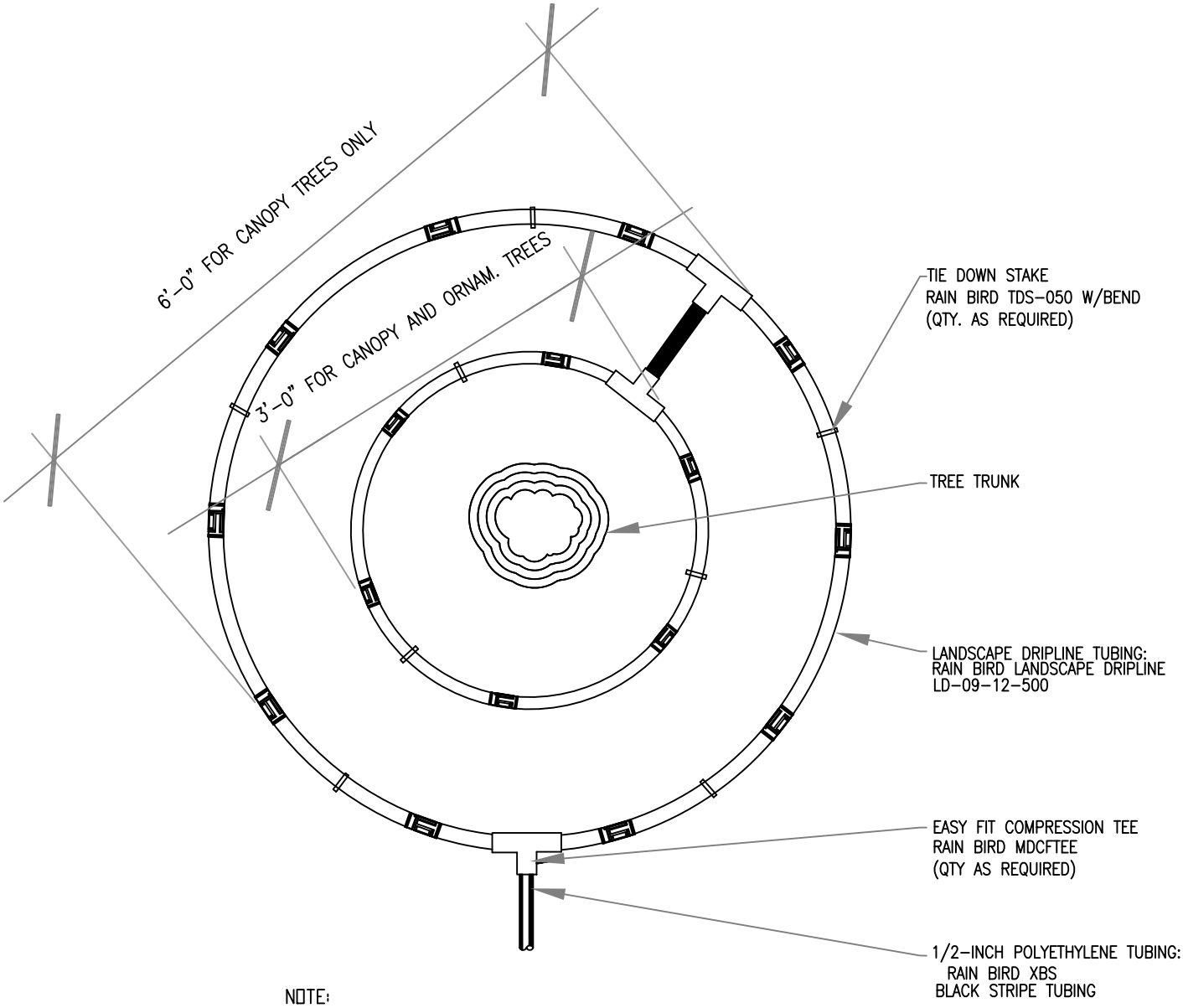

NOTE:
1. SEE "LOW-VOLUME LANDSCAPE IRRIGATION DESIGN MANUAL (D39030D) FOR DRIPLINE EMITTER SPACING.
2. QUANTITY OF DRIPLINE RINGS, EMITTER SPACING AND FLOWS ARE DEPENDANT ON TREE CANOPY SIZE.

NOT TO SCALE

DEPARTMENT OF PUBLIC WORKS SPRINGFIELD, MO.	**DRIP LINE ST SOLO TREE LOCATION**	ADOPTED: 7/1/2013 LI - 5

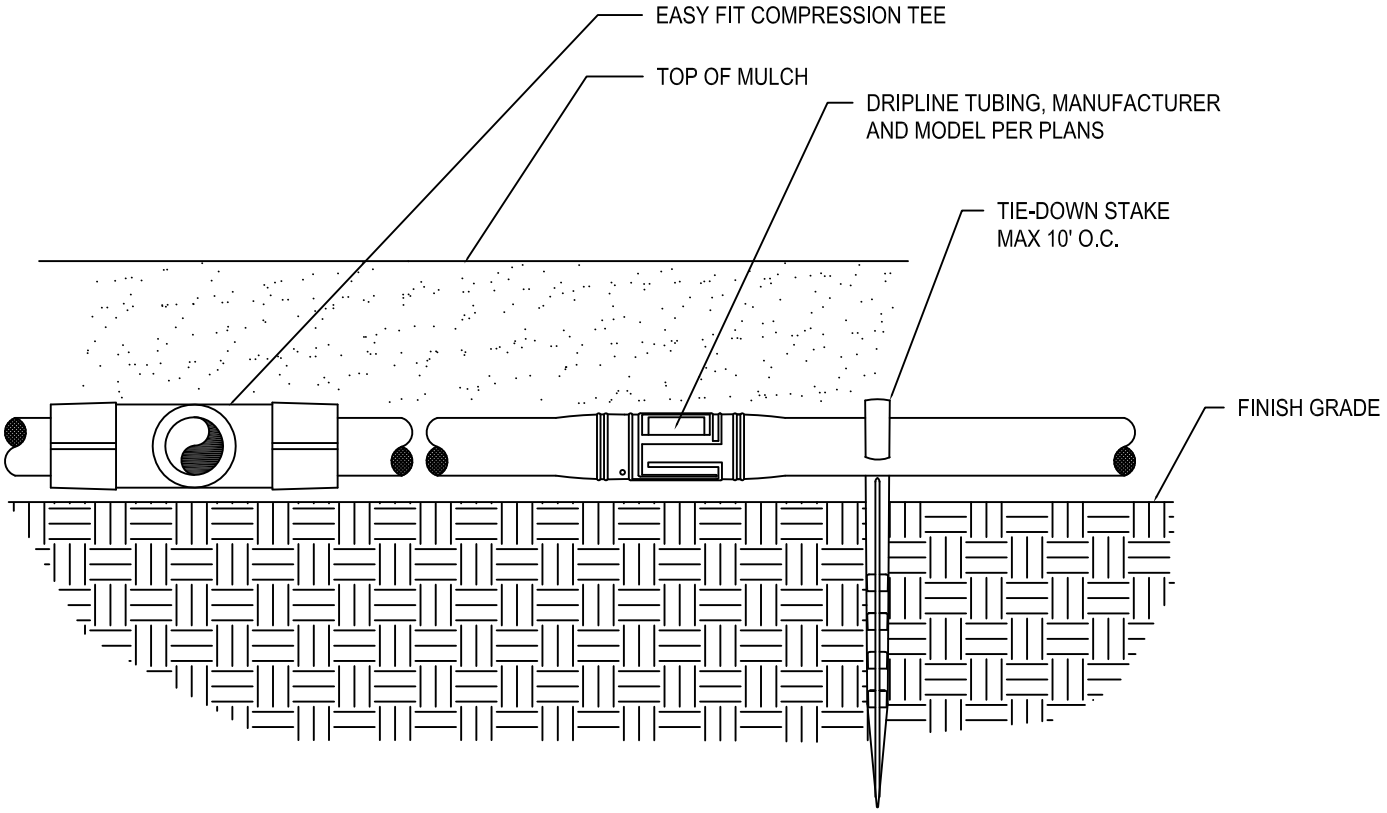

NOT TO SCALE

DEPARTMENT OF PUBLIC WORKS SPRINGFIELD, MO.	**DRIPLINE TUBING**	ADOPTED: 7/1/2013 LI - 6

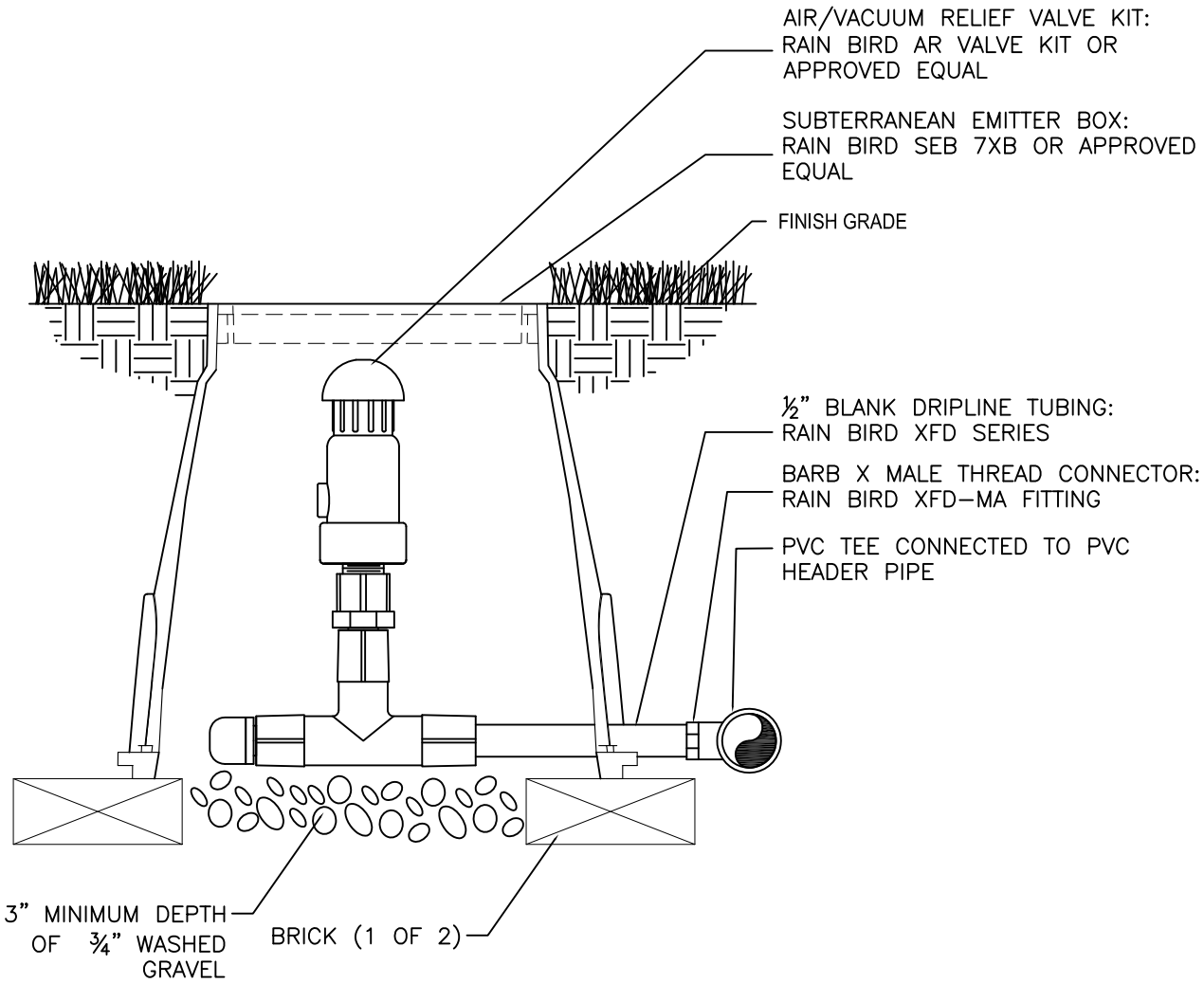

NOT TO SCALE

DEPARTMENT OF PUBLIC WORKS SPRINGFIELD, MO.	**AIR/VACUM RELIEF VALVE**	ADOPTED: 7/1/2013 LI - 7

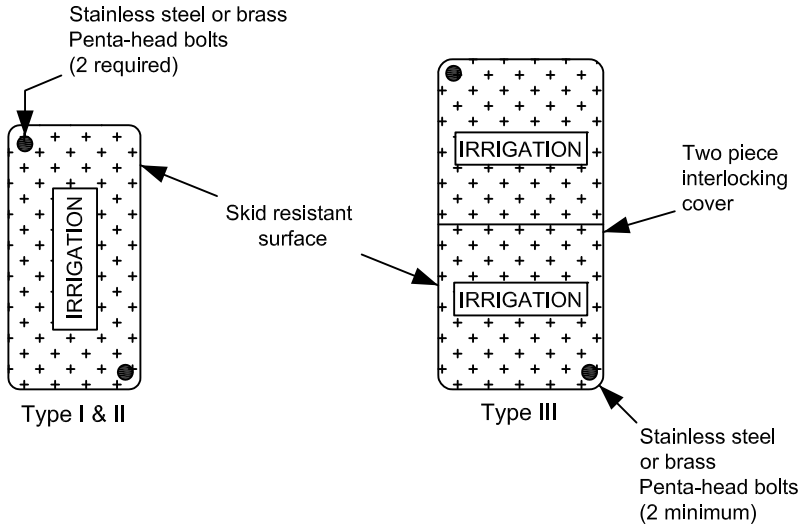

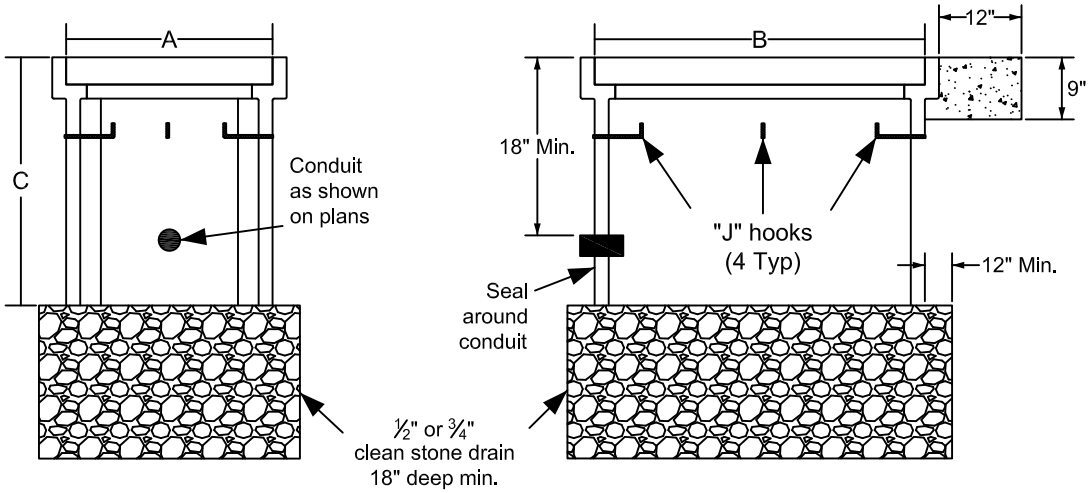

	DIMENSIONS		
	TYPE I	TYPE II	TYPE III
A	17"	24"	30"
B	30"	36"	48"
C	28"	30"	36"

Notes:
1. Preformed pull boxes shall be used unless otherwise specified on the plans.

2. Lift opening is required on all covers.

3. All demensions are nominal.

4. If extensions are needed, they shall be compatable and from the same manufacturer.

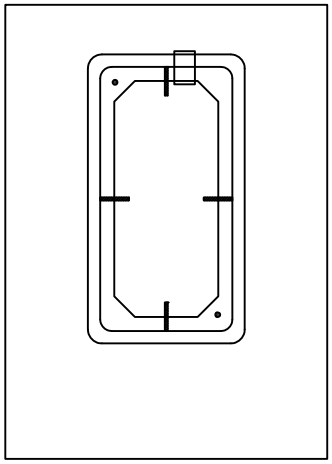

9" Thick concrete
pad 12" all sides

NOT TO SCALE

DEPARTMENT OF PUBLIC WORKS SPRINGFIELD, MO.	**PREFORMED IRRIGATION PULL BOXES**	ADOPTED: 7/1/2013 LI-8

NOTES:

DO NOT HEAVILY PRUNE THE TREE AT PLANTING. PRUNE ONLY CROSSOVER LIMBS, CO–DOMINANT LEADERS, AND BROKEN OR DEAD BRANCHES. SOME INTERIOR TWIGS AND LATERAL BRANCHES MAY BE PRUNED; HOWEVER, DO NOT REMOVE THE TERMINAL BUDS OF BRANCHES THAT EXTEND TO THE EDGE OF THE CROWN.

STAKE TREES ONLY IF DIFFICULT KEEPING PLUMB OR AS CITY INSPECTION.

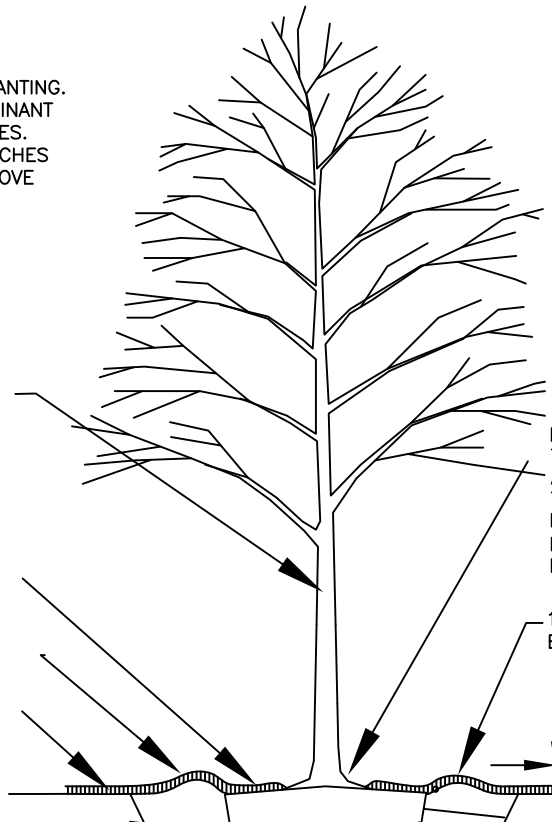

MARK THE NORTH SIDE OF THE TREE IN THE NURSERY, AND ROTATE TREE TO FACE NORTH AT THE SITE WHEN EVER POSSIBLE.

EACH TREE MUST BE PLANTED SUCH THAT THE TRUNK FLARE IS VISIBLE AT THE TOP OF THE ROOT BALL. TREES WHERE THE TRUNK FLARE IS NOT VISIBLE SHALL BE REJECTED. DON'T COVER THE TOP OF THE ROOT BALL WITH SOIL.

SET TOP OF ROOT BALL FLUSH TO GRADE OR 25MM–50MM (1"–2") HIGHER IN SLOWLY DRAINING SOILS.

MULCH RING, 1800MM (6') DIA.

100MM (4") HIGH EARTH SAUCER BEYOND EDGE OF ROOT BALL.

DRIP IRRIGATION RING. SEE DETAIL

SHOVEL–CUT EDGE AT EDGE OF MULCH RING. SEE DETAIL

75MM (3") MULCH. DO NOT PLACE MULCH IN CONTACT WITH TREE TRUNK.

1.0'

TREE PIT MIN. WIDTH IS 2 X WIDTH OF ROOT BALL.

REMOVE ALL TWINE, ROPE, WIRE AND BURLAP FROM ROOT BALL.

IF PLANT IS SHIPPED WITH A WIRE BASKET AROUND ROOT BALL, CUT THE WIRE BASKET & REMOVE IT.

TAMP SOIL AROUND ROOT BALL BASE FIRMLY WITH FOOT PRESSURE SO THAT ROOT BALL DOESN'T SHIFT.

PLACE ROOT BALL ON UNEXCAVATED OR TAMPED SOIL.

NOT TO SCALE

DEPARTMENT OF PUBLIC WORKS SPRINGFIELD, MO.	**TREE DETAIL**	ADOPTED: 7/1/2013 LP - 1

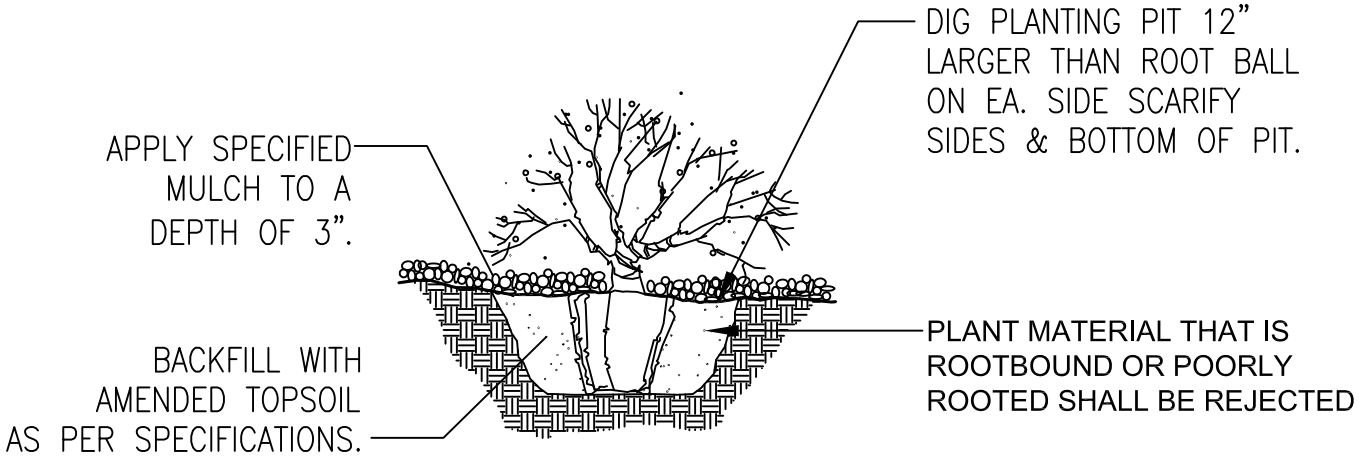

NOTE:

1. SET SHRUBS AT SAME GRADE AS GROWN IN NURSERY.
2. PRUNE ALL DAMAGED OR DEAD WOOD PRIOR TO PLANTING.

NOT TO SCALE

DEPARTMENT OF PUBLIC WORKS SPRINGFIELD, MO.	**SHRUB IN TOPSOIL**	ADOPTED: 7/1/2013 LP - 2

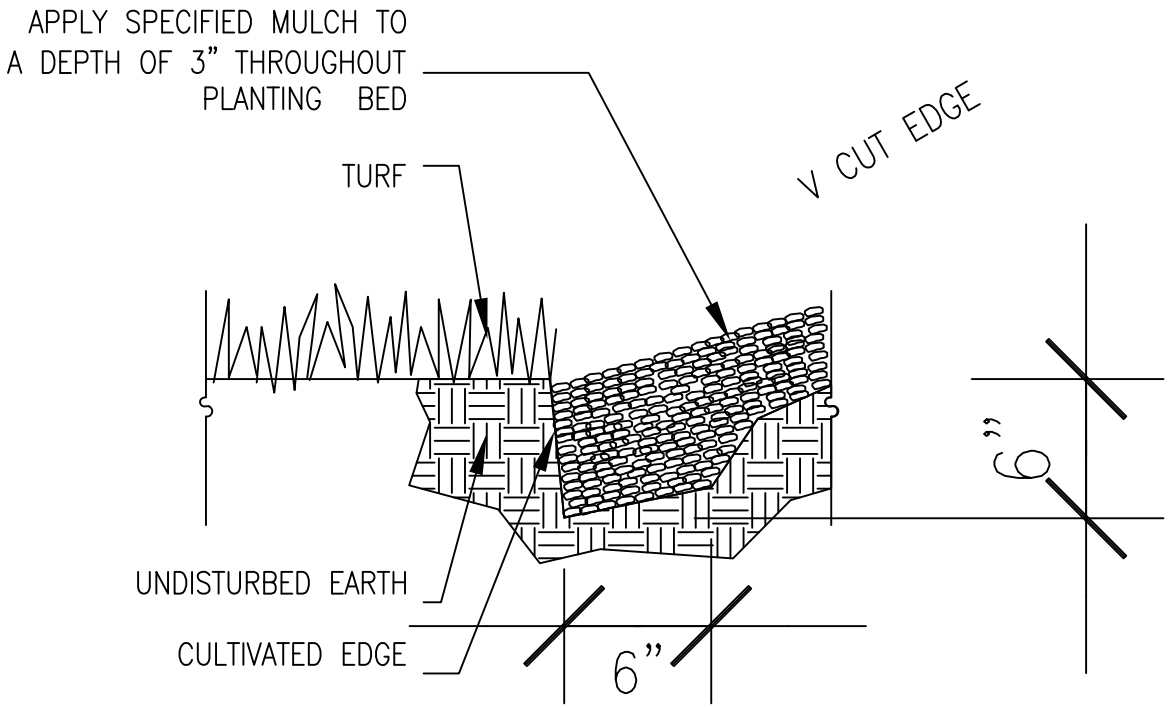

NOT TO SCALE

DEPARTMENT OF PUBLIC WORKS SPRINGFIELD, MO.	**SHOVEL-CUT EDGE**	ADOPTED: 7/1/2013 LP - 3