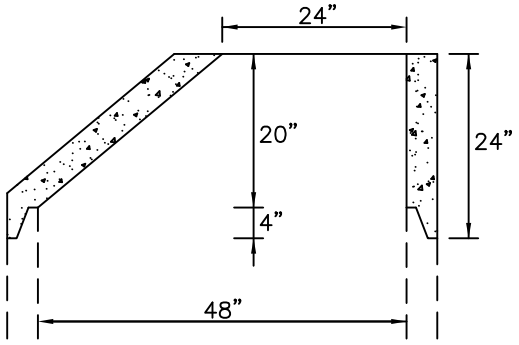

24” CONE

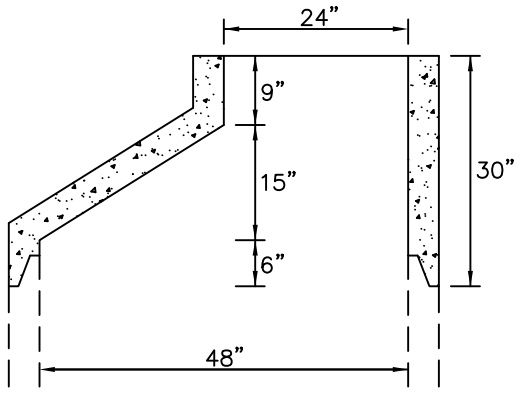

30” CONE

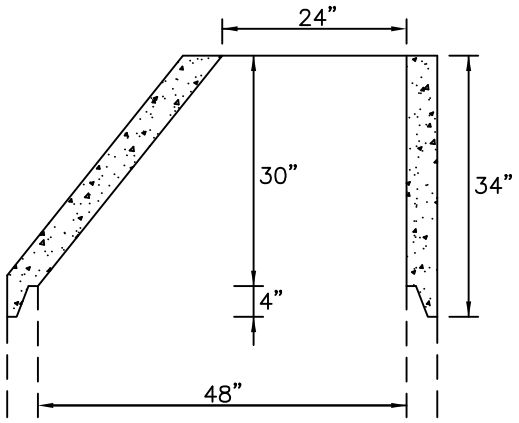

34” CONE

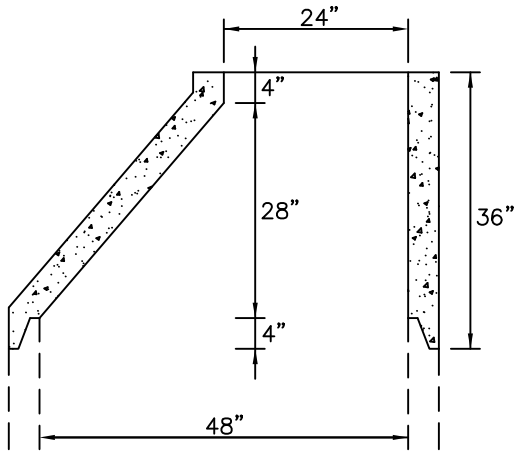

36” CONE

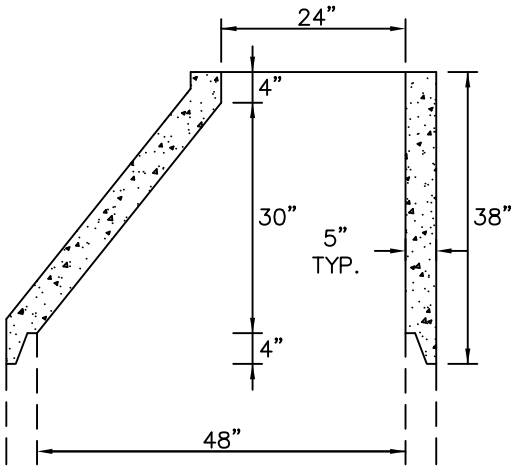

38” CONE

NOTE: WALL THICKNESS 5” TYP.

DEPARTMENT OF PUBLIC WORKS SPRINGFIELD, MO.	STANDARD CONE CONFIGURATION FOR MANHOLES	ADOPTED: 11–6–2012 SAN–16